STEERING

CONTENTS

GENERAL INFORMATION 2

SERVICE SPECIFICATIONS 4

LUBRICANTS 4

SEALANT AND ADHESIVE 4

SPECIAL TOOLS 5

ON-VEHICLE SERVICE 7

- Steering Wheel Free Play Check 7
- Steering Angle Check 7
- Tie Rod End Ball Joint Starting Torque Check 7
- Stationary Steering Effort Check 8
- Steering Wheel Returnability Check 8
- Oil Pump Belt Tension Check 8
- Power Steering Fluid Level Check 9
- Power Steering Fluid Replacement 9
- Power Steering System Bleeding 9
- Oil Pressure Test 10
- Power Steering Oil Pressure Switch Check 11
- Ball Joint Dust Cover Check 11

STEERING WHEEL AND SHAFT* 12

POWER STEERING GEAR BOX AND LINKAGE 15

POWER STEERING OIL PUMP 29

POWER STEERING OIL HOSES 36

WARNINGS REGARDING SERVICING OF SUPPLEMENTAL RESTRAINT SYSTEM (SRS) EQUIPPED VEHICLES

WARNING!

(1) Improper service or maintenance of any component of the SRS, or any SRS-related component, can lead to personal injury or death to service personnel (from inadvertent firing of the air bag) or to the driver and passenger (from rendering the SRS inoperative).

(2) Service or maintenance of any SRS component or SRS-related component must be performed only at an authorized MITSUBISHI dealer.

(3) MITSUBISHI dealer personnel must thoroughly review this manual, and especially its GROUP 52B – Supplemental Restraint System (SRS) before beginning any service or maintenance of any component of the SRS or any SRS-related component.

NOTE

The SRS includes the following components: SRS-ECU, SRS warning lamp, air bag module, clock spring and interconnecting wiring. Other SRS-related components (that may have to be removed/installed in connection with SRS service or maintenance) are indicated in the table of contents by an asterisk (*).

GENERAL INFORMATION

A 3- or 4-spoke type steering wheel has been mounted. On the SRS equipped vehicle, a 4-spoke type has been mounted.
The power steering is an integral rack and pinion type that combines the steering gear and linkage into one light-weight and compact assembly.
The steering system uses a vane oil pump with a fluid flow control system, so that steering effort varies with engine speed.

Item		Specifications
Steering gear and linkage	Type	Integral type
	Gear type	Rack and pinion
Oil pump	Type	Vane type
	Displacement mℓ/rev.	7.2
	Relief set pressure Mpa	8.8

CONSTRUCTION DIAGRAM

<L.H. drive vehicles>

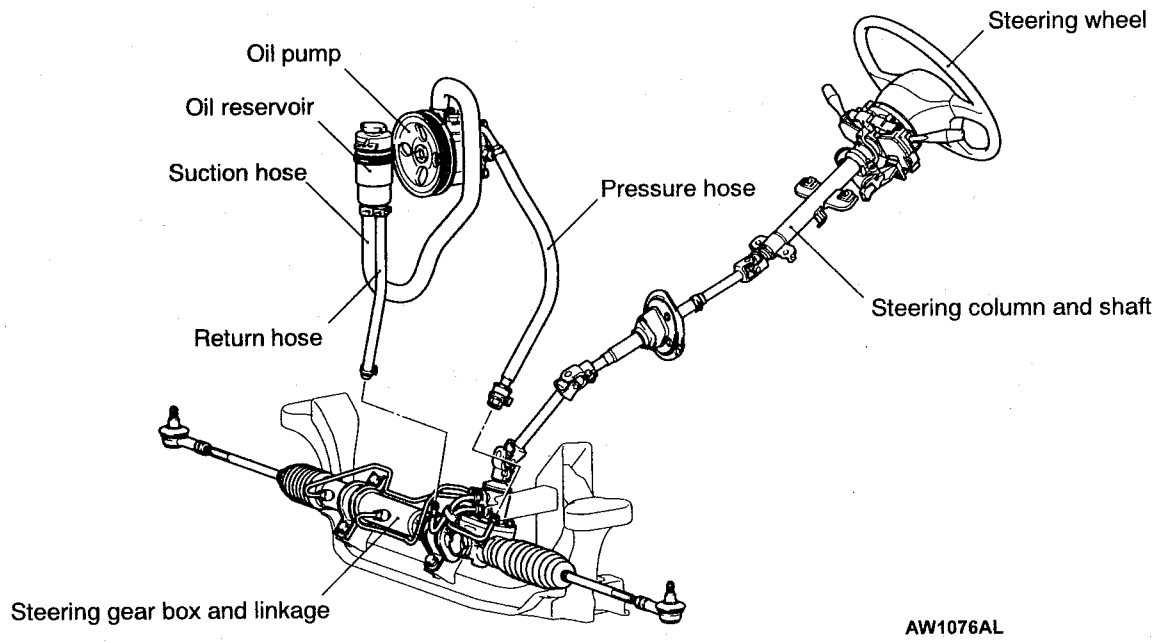

<R.H. drive vehicles (MPI)>

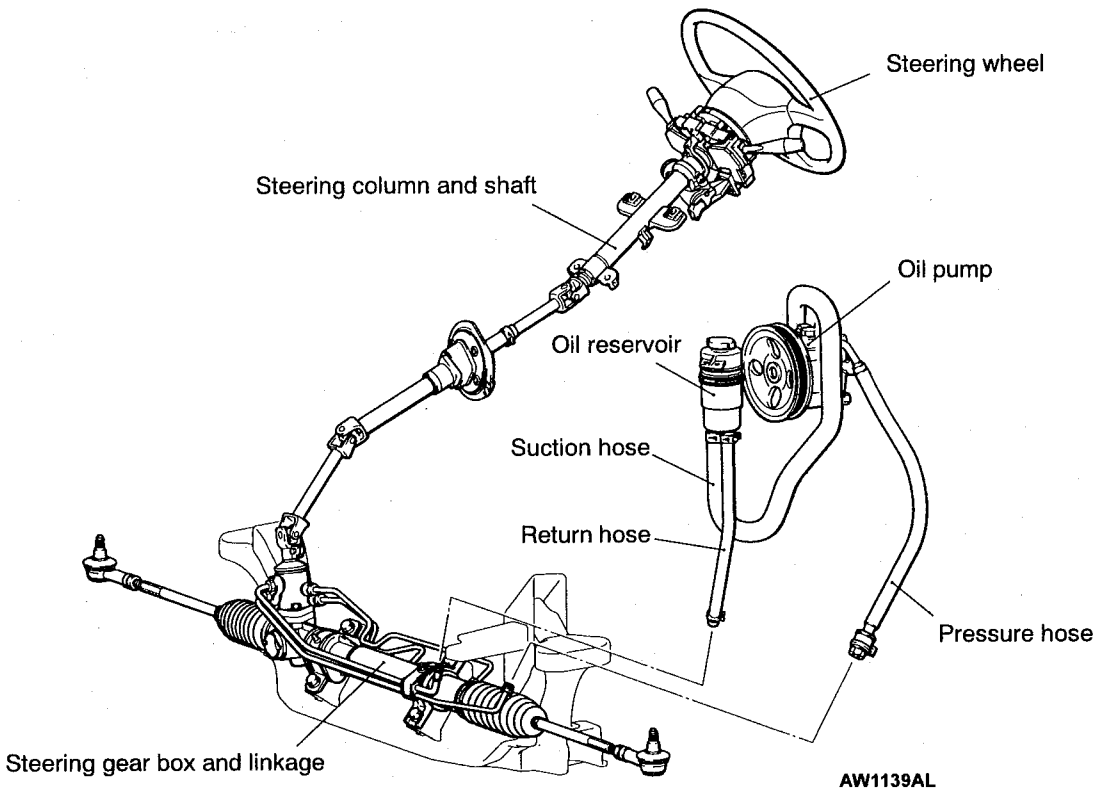

<R.H. drive vehicles (GDI)>

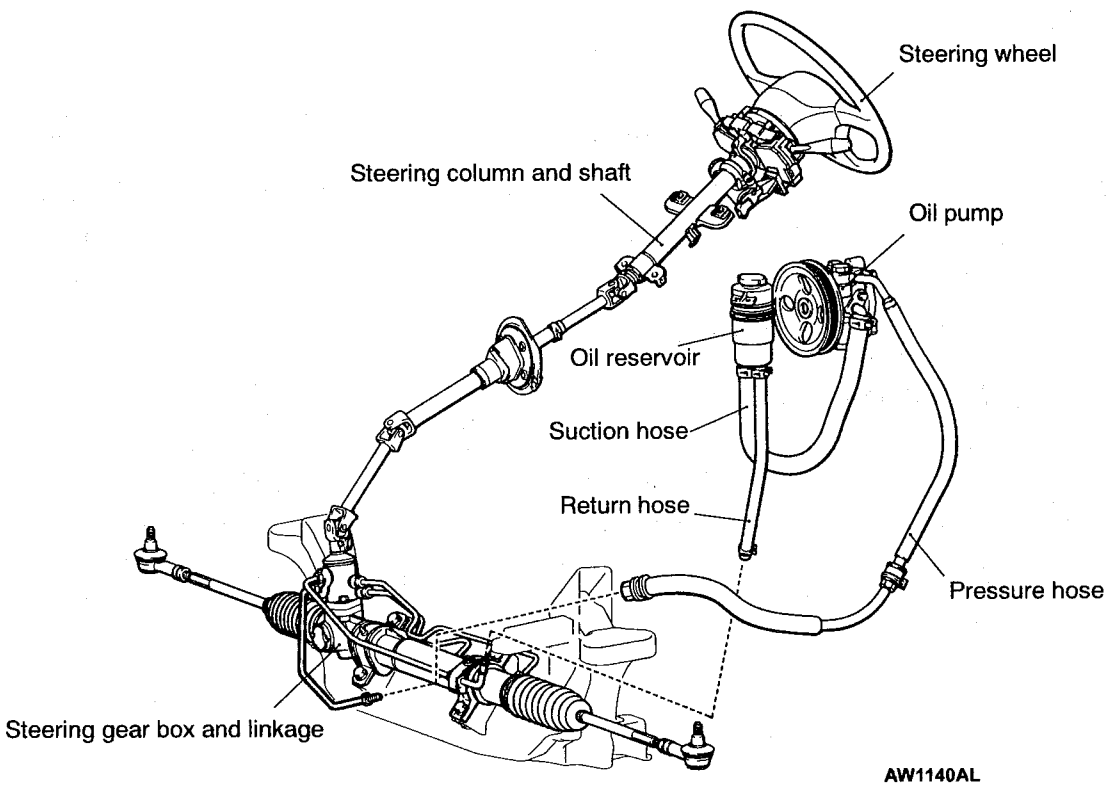

SERVICE SPECIFICATIONS

Item			Standard value	Limit
Steering wheel free play mm		with engine running	–	30 or less
		with engine stopped	0 – 10	–
Steering angle		Inner wheel	34°40' ± 2°	–
		Outer wheel <For reference>	32°10'	–
Ball joint turning torque Nm			0.5 – 2.5	–
Stationary steering effort N		Steering effort	27 or less	30 or less
		Fluctuation allowance	5.9 or less	–
Oil pump relief pressure MPa			8.8	–
Pressure under no-load condition MPa			0.2 – 0.7	–
Steering gear retention hydraulic pressure MPa			8.8	–
Oil pressure switch operating pressure MPa	OFF→ON	GDI	1.5 – 2.0	–
		MPI	1.8 – 2.4	–
	ON→OFF	GDI	0.7 – 2.0	–
		MPI	0.8 – 2.4	–
Pinion total rotation torque Nm		Total rotation torque	0.6 – 1.5	–
		Torque variation	0.5 or less	–
Tie rod joint swing resistance N (Tie rod joint swing torque Nm)			5 – 17 (1.5 – 4.9)	–
Special tool aperture dimension (MB991561) mm			2.9	–
Band crimped width mm			2.4 – 2.8	–

LUBRICANTS

Item	Specified lubricant	Quantity
Power steering	Automatic transmission fluid DEXRON or DEXRON II	About 0.6 ℓ
Tie rod bellows	Silicone grease	As required
Pinion and valve assembly	Repair kit grease	As required
Rack assembly	Repair kit grease	As required

SEALANT AND ADHESIVE

Item	Specified sealant	Remarks
Rack support cover end plug	3M ATD Part No. 8661 or equivalent	Semi-drying sealant
Gear housing mounting rubber	3M ATD Part No. 8155 or equivalent	Quick fix adhesive

SPECIAL TOOLS

Tool	Number	Name	Use
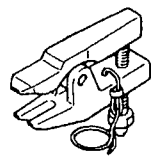 B991113	MB990635, MB991113 or MB991406	Steering linkage puller	Tie rod end disconnection
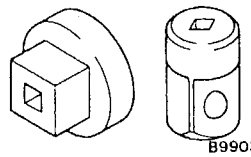 B990326	MB990326	Preload socket	Ball joint turning torque measurement
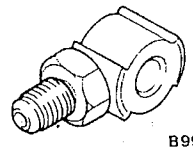 B990993	MB990993	Power steering oil pressure gauge adapter (pump side)	Oil pressure measurement
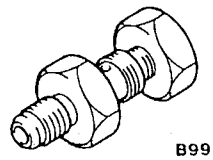 B990994	MB990994	Power steering oil pressure gauge adapter (hose side)	
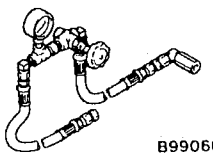 B990662	MB990662	Oil pressure gauge assembly	
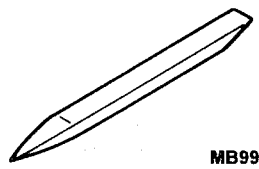 MB990784	MB990784	Ornament remover	Steering wheel cover removal <Vehicles with SRS>
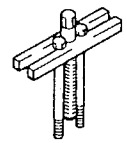 B990803	MB990803	Steering wheel puller	Steering wheel disconnection <Vehicles without SRS>
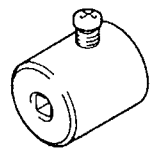 B991006	MB991006	Preload socket	Total pinion torque measurement
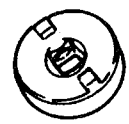 B991621	MB991621	Rack support cover wrench	• Rack support cover removal • Total pinion torque adjustment

Tool	Number	Name	Use
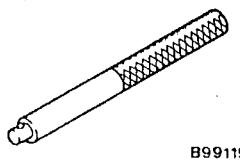 B991197	MB991197	Bar (long type)	Gear housing oil seal press fitting
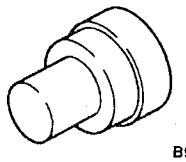 B991198	MB991199	Oil seal installer	
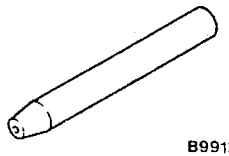 B991212	MB991213	Oil seal protector	Rack assembly installation
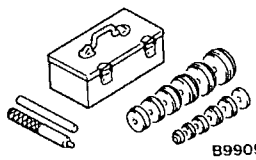 B990925	MB990925	Bearing and oil seal installer set	Oil seal and bearing press fitting (Refer to GROUP 26 – Special Tools.)
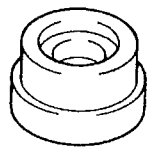 B991203	MB991203	Oil seal and bearing installer	Valve housing oil seal and bearing press fitting
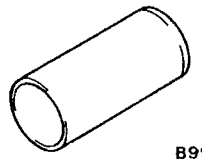 B991317	MB991317	Seal ring installer	Pinion seal ring compression
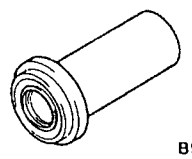 B990941	MB990941	Torque tube bearing installer	Valve housing lower oil seal press fitting
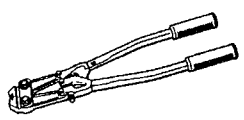	MB991561	Boot band crimping tool	Bellows band installation
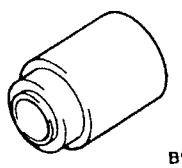 B990776	MB990776	Front axle base	Dust cover press fitting

ON-VEHICLE SERVICE

STEERING WHEEL FREE PLAY CHECK

1. With the engine running (hydraulic pressure operating), put the front wheels in straight-ahead position.
2. Lightly turn the steering wheel left and right to measure circumferential play on the steering wheel before the wheels start to move.

   Limit: 30 mm or less

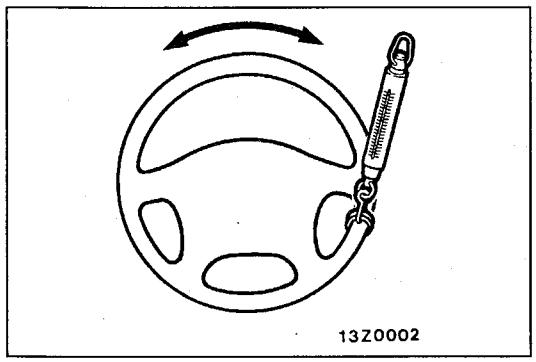

3. When the play exceeds the limit, check steering shaft connections and steering linkage for looseness. Repair or replace if necessary.
4. If the play still exceeds the limit, put the steering wheel in straight-ahead position with the engine stopped. Then, load 5 N in the circumferential direction on the steering wheel and measure circumferential play.

   Standard value: 0 – 10 mm
5. In case the play exceeds the standard value again, remove the steering gear box and linkage. Then, check and adjust total pinion torque. (Refer to P.37A-18.)

STEERING ANGLE CHECK

1. Put the front wheels on a turning radius gauge and measure steering angle.

   Standard value:

Inner wheels	34°40' ± 2°
Outer wheels <For reference>	32°10'

2. If the standard values are not met, toe-in is probably incorrect. Adjust the toe-in, seeing GROUP 33A – On-vehicle Service, and recheck the steering angle.

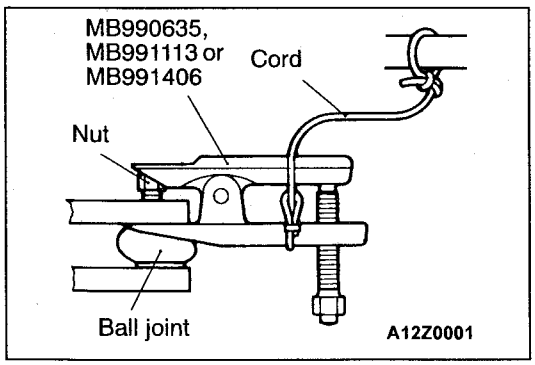

TIE ROD END BALL JOINT STARTING TORQUE CHECK

1. Use the special tool to disconnect the tie rod and knuckle.

   Caution
   (1) In order not to damage the ball joint thread, the tie rod end mounting nut must be only loosened but not removed from the ball joint. Also, be sure to use the special tool.
   (2) Tie the special tool with a cord so as not to fall off.

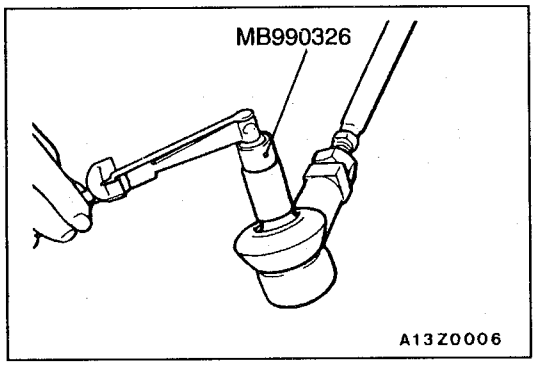

2. After swinging the ball joint stud several times, install the nut on the stud. Then, measure ball joint turning torque with the special tool.

   Standard value: 0.5 – 2.5 Nm

3. When the torque is over the standard value, replace the tie rod end.
4. When the torque is below the standard value, check the ball joint for looseness or ratcheting. If none of these found, the ball joint is still serviceable.

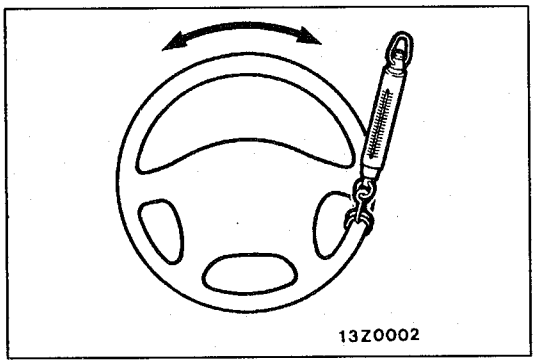

STATIONARY STEERING EFFORT CHECK

1. With the vehicle stopped on a flat, paved surface, put the steering wheel in straight–ahead position.
2. Start the engine and keep it at 1,000±100 r/min.
3. Attach a spring balance to the steering wheel outer bar. Measure steering effort required to turn the steering wheel from the straight-ahead position to the left and right (within a range of 1.5 turns). Also see that no significant fluctuation is present in the steering effort.

   Standard value:

Steering effort	27 N or less <Limit: 30 N or less>
Fluctuation	5.9 N or less

4. If the standard values are not met, check and adjust the related parts.

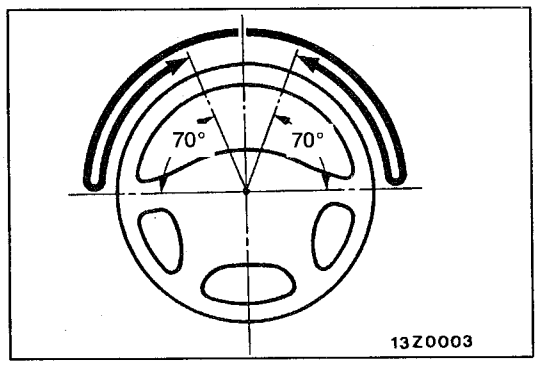

STEERING WHEEL RETURNABILITY CHECK

Check returnability as follows on road test:

1. Make both gradual and sudden turns and see by your own feeling that the steering effort and returnability have no difference between the left and right turns.
2. At a speed of about 35 km/h, turn the steering wheel 90°, keep it there for 1 to 2 seconds and release. When the steering wheel returns more than 70°, it has a good returnability.

   NOTE
   You may have momentary increase in effort when turning the steering wheel quickly, which is normal. This happens due to insufficient job of the oil pump when the engine is running at low speed such as idling.

OIL PUMP BELT TENSION CHECK

Refer to GROUP 11A/11B/11C – On-vehicle Service.

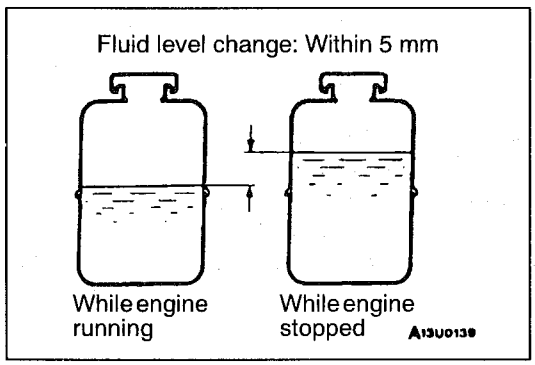

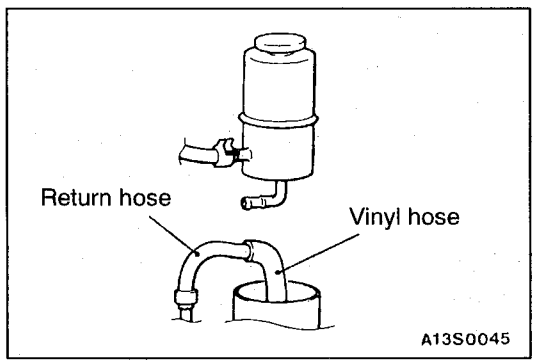

POWER STEERING FLUID LEVEL CHECK

1. Park the vehicle on a flat, level surface and start the engine. Without the vehicle moving, turn the steering wheel several times until the fluid reaches 50 to 60°C.
2. With the engine running, turn the wheel fully left and right several times.
3. Check the fluid in the oil reservoir for foaming or milkiness.
4. Check difference in fluid level between the engine stopped and running. If the difference is 5 mm or more, bleed air.

POWER STEERING FLUID REPLACEMENT

1. Jack up the vehicle and support the front wheels with rigid racks.
2. Disconnect the return hose.
3. Connect a vinyl hose to the return hose and drain fluid into a container.
4. Disconnect the ignition coil connectors. (Refer to GROUP16 – Ignition System.)
5. Cranking the engine several times intermittently with the starter, turn the steering wheel fully left and right to drain the fluid.
6. Connect the return hose and secure it with the clip.
7. Fill the oil reservoir with specified fluid up to between "MAX" and "MIN" marks, and then bleed air.

Specified fluid:
Automatic transmission fluid DEXRON or DEXRON II

Caution
Do not use ATF-SP II as it damages the components of the power steering.

POWER STEERING SYSTEM BLEEDING

1. Jack up the vehicle and support the front wheels with rigid racks.
2. Disconnect the ignition coil connectors. Cranking the engine with the starter several times intermittently (during 15 to 20 seconds), turn the steering wheel left and right fully five or six times.

Caution
(1) During the bleeding, refill the fluid so that the level is always above "MIN" mark on the oil reservoir.
(2) Be sure to bleed air only while cranking. If the bleeding is done with the engine running, the air will be broken up and absorbed into the fluid.

3. Connect the ignition coil connectors and idle the engine.
4. Turn the steering wheel left and right fully until no bubbles comes out in the oil reservoir.
5. See that the fluid is not milky and that the fluid level is between "MAX" and "MIN" marks.
6. See that the fluid level changes little when the steering wheel is turned left and right.
7. Check difference in fluid levels between the engine stopped and running.

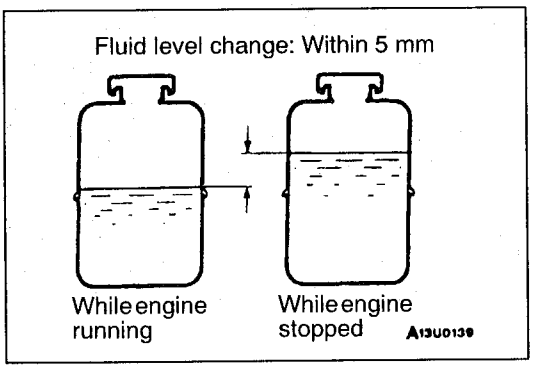

8. If the level changes more than 5 mm, the air is badly bled. So, bleed air again.

Caution
(1) If the fluid level rises suddenly after the engine is stopped, the bleeding is incomplete.
(2) Incomplete bleeding causes abnormal noises from the pump and the flow-control valve. This could lessen the life of the pump and the other parts.

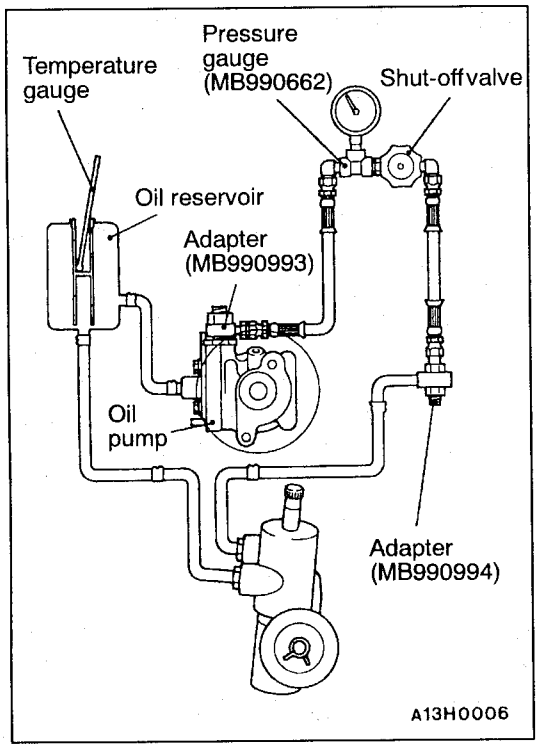

OIL PUMP PRESSURE TEST

1. Disconnect the pressure hose from the oil pump, and then connect the special tools.
2. Bleed air. Without the vehicle moving, turn the steering wheel several times to raise the fluid temperature to 50 to 60°C.
3. Start the engine and idle at 1,000±100 r/min.
4. Fully close the shut-off valve of the pressure gauge and measure the oil pump relief pressure.

   Standard value: 8.8 MPa
5. If the standard value is not met, disassemble and assemble the oil pump again. Then, remeasure oil pressure.
6. With the pressure gauge shut-off valve fully open, check the hydraulic pressure in unladen condition.

   Standard value: 0.2 – 0.7 MPa
7. If the standard value is not met, the oil line or steering gear is probably defective. So, repair and measure oil pressure again.
8. Turn the steering wheel fully either left or right and check the retention hydraulic pressure.

   Standard value: 8.8 MPa
9. If the pressure is below the standard value, disassemble and reassemble the steering gear. If above, disassemble and reassemble the components of the oil pump flow control valve. Then, measure oil pressure again.
10. Remove the special tools, and tighten the pressure hose to the specified torque.

    Tightening torque: 57 Nm
11. Bleed the system.

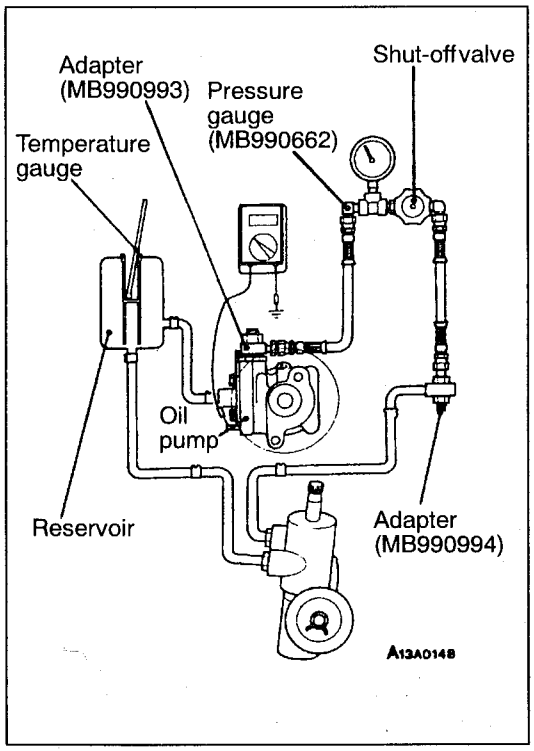

POWER STEERING OIL PRESSURE SWITCH CHECK

1. Disconnect the pressure hose from the oil pump and connect the special tools.
2. Bleed air. Without the vehicle moving, turn the steering wheel several times to raise the fluid temperature to 50 to 60°C.
3. Idle the engine.
4. Disconnect the oil pressure switch connector and set an ohmmeter in position.
5. Gradually close the shut-off valve in the pressure gauge to increase hydraulic pressure. Check that the hydraulic pressure activating the switch meets the standard value.

   Standard value:
   <GDI> 1.5 – 2.0 MPa
   <MPI> 1.8 – 2.4 MPa

6. Gradually open the shut-off valve and reduce the hydraulic pressure. Check that the hydraulic pressure deactivating the switch meets the standard value.

   Standard value:
   <GDI> 0.7 – 2.0 MPa
   <MPI> 0.8 – 2.4 MPa

7. Remove the special tools and tighten the pressure hose to the specified torque.

   Tightening torque: 57 Nm

8. Bleed the system.

BALL JOINT DUST COVER CHECK

1. Check the dust cover for cracks or damage by pushing it with finger.
2. If the dust cover is cracked or damaged, replace the tie rod end.

   NOTE
   A cracked or damaged dust cover may damage the ball joint.

STEERING WHEEL AND SHAFT

REMOVAL AND INSTALLATION

Caution:
1. **Before removing the air bag module and clock spring, refer to GROUP 52B – Service Precautions and Air Bag Module and Clock Spring.**
2. **Use an earth bolt for one of the steering shaft assembly mounting bolts. The earth bolt has mark "E" on its head.**

Pre-removal Operation
Instrument Under Cover Removal
(Refer to GROUP 52A.)

Post-installation Operation
- Instrument Under Cover Installation
  (Refer to GROUP 52A.)
- Checking Steering Wheel Position with Wheels Straight Ahead

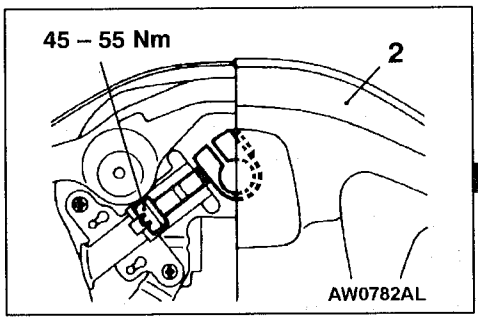

Standard bolt	Earth bolt
	 B13I0022
12 Nm	22 Nm

Removal steps

◀A▶ ◀B▶ 1. Cover <Vehicles with SRS>
2. Steering wheel and air bag module assembly <Vehicles with SRS>
3. Horn pad <Vehicles without SRS>
◀C▶ 4. Steering wheel <Vehicles without SRS>
5. Lower column cover
6. Upper column cover
7. Clock spring and column switch assembly <Refer to GROUP 52B>
8. Cover <A/T>
9. Key interlock cable <A/T>
10. Steering column shaft assembly

NOTE
When the air bag module assembly must be removed, refer to GROUP 52B – Air Bag Modules and Clock Spring.

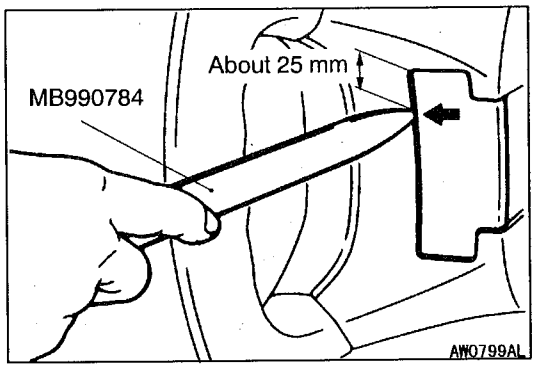

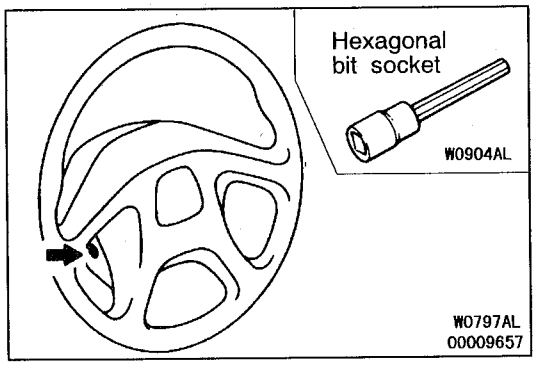

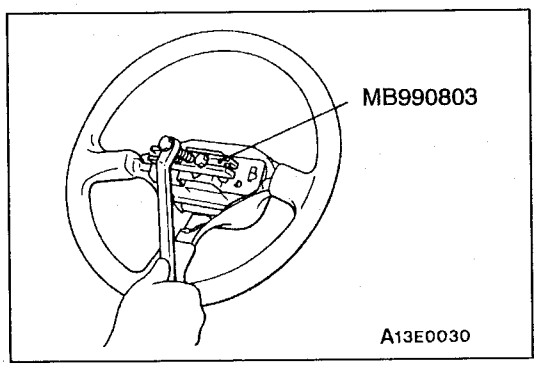

REMOVAL SERVICE POINTS

◀A▶ COVER REMOVAL <Vehicles with SRS>

Insert the special tool from the indicated position to remove the cover.

NOTE
The special tool can be inserted through the notch behind the position shown.

◀B▶ STEERING WHEEL ASSEMBLY REMOVAL <Vehicles with SRS>

1. Disconnect the connectors of the air bag module and the horn switch through a hole made after the removal of the cover.
2. Loosen the bolt completely. Then, remove the steering wheel assembly.

NOTE
Use a hexagonal bit socket or a hexagonal wrench having an effective length of 75 mm or more in the hexagonal section and the diameter of 8 mm or more.

◀C▶ STEERING WHEEL REMOVAL <Vehicles without SRS>

DISASSEMBLY AND REASSEMBLY

<L.H. drive vehicles>

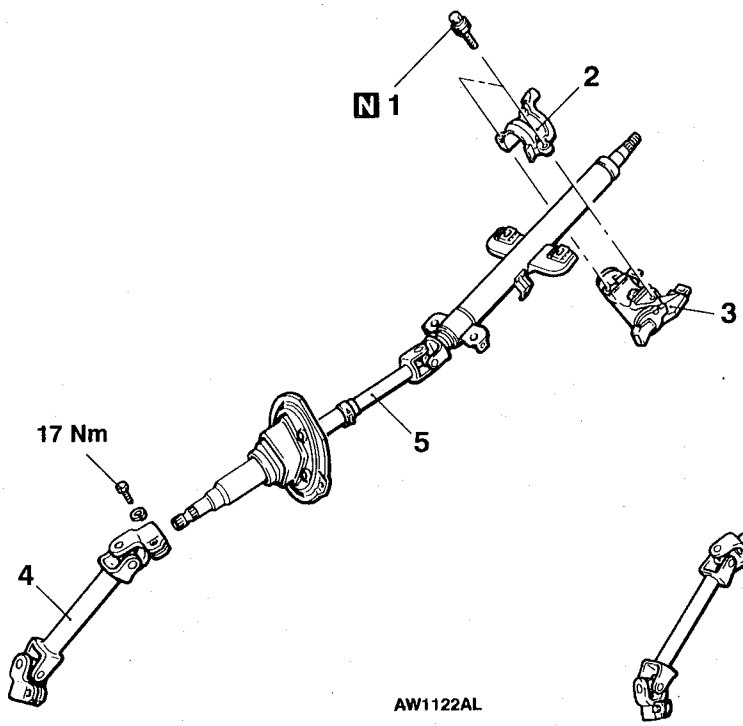

<R.H. drive vehicles>

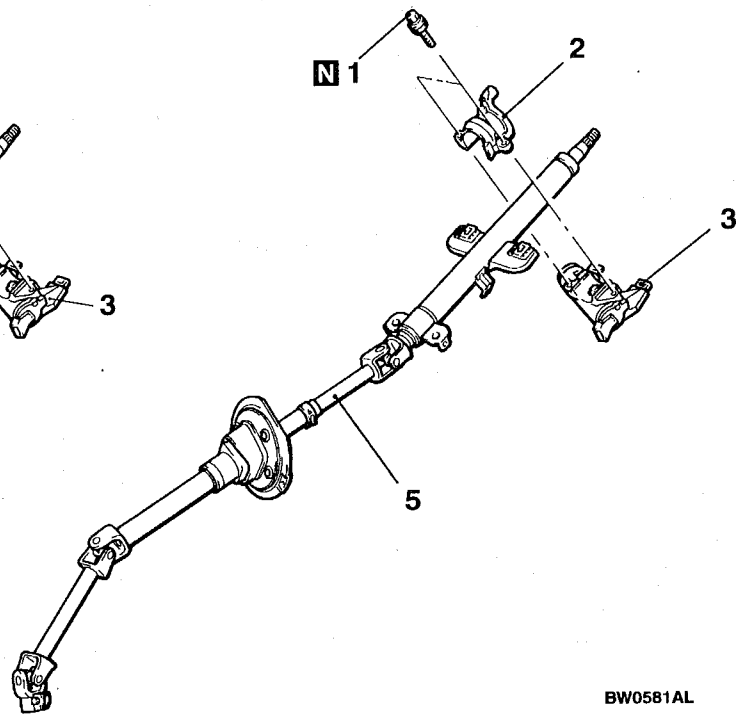

Disassembly steps

◀A▶ ▶A◀ 1. Special bolt
▶A◀ 2. Steering lock bracket
▶A◀ 3. Steering lock cylinder assembly
4. Shaft assembly <L.H. drive vehicles>
5. Steering column shaft assembly

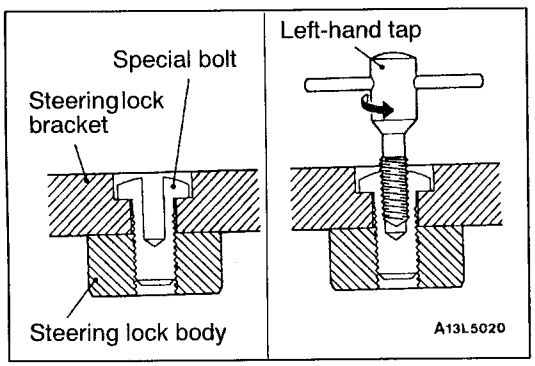

DISASSEMBLY SERVICE POINT

◀A▶ SPECIAL BOLT REMOVAL

1. In the special bolt, drill a hole deep enough for the tap to stand.
2. Using a left-hand tap, remove the special bolt.

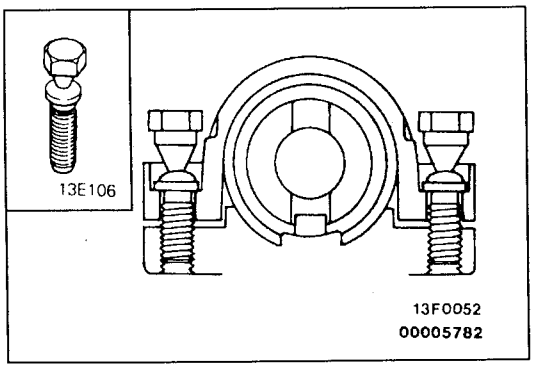

REASSEMBLY SERVICE POINT

▶A◀ STEERING LOCK CYLINDER ASSEMBLY/ STEERING LOCK BRACKET/SPECIAL BOLT INSTALLATION

1. When installing the steering lock cylinder assembly and steering lock bracket to the steering column assembly, temporarily install the steering lock in alignment with the column boss.
2. Check that the steering lock works properly. Then, tighten the special bolts until the heads twists off.

POWER STEERING GEAR BOX AND LINKAGE

REMOVAL AND INSTALLATION

Caution: SRS
On vehicles with SRS, before removing steering gear box, refer to GROUP 52B. Also, put the front wheels in straight-ahead position and remove the ignition key. Failure to do so may damage the SRS clock spring and render the SRS air bag inoperative, which results serious driver injury.

Pre-removal Operation
- Power Steering Fluid Draining (Refer to P.37A-9.)
- Under Cover Removal

Post-installation Operation
- Check the Dust Cover for Cracks or Damage by Pushing it with Finger.
- Under Cover Installation
- Power Steering Fluid Supplying and bleeding (Refer to P.37A-9.)
- Checking Steering Wheel Position with Wheels Straight Ahead
- Front Wheel Alignment Check and Adjustment (Refer to GROUP 33A – On-vehicle Service.)

<L.H. drive vehicles>

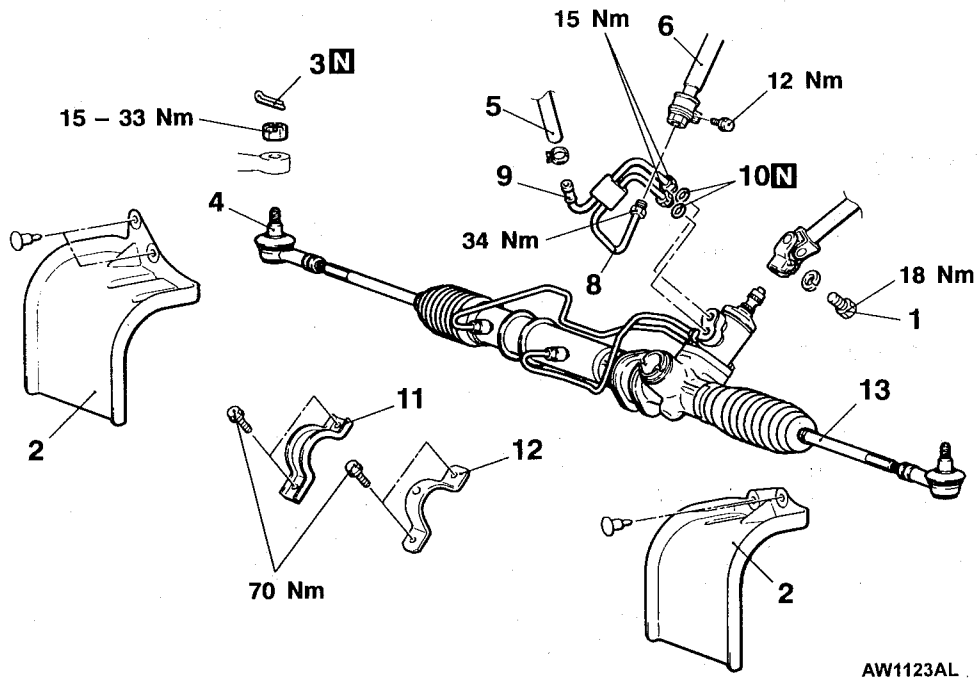

<R.H. drive vehicles (GDI)>

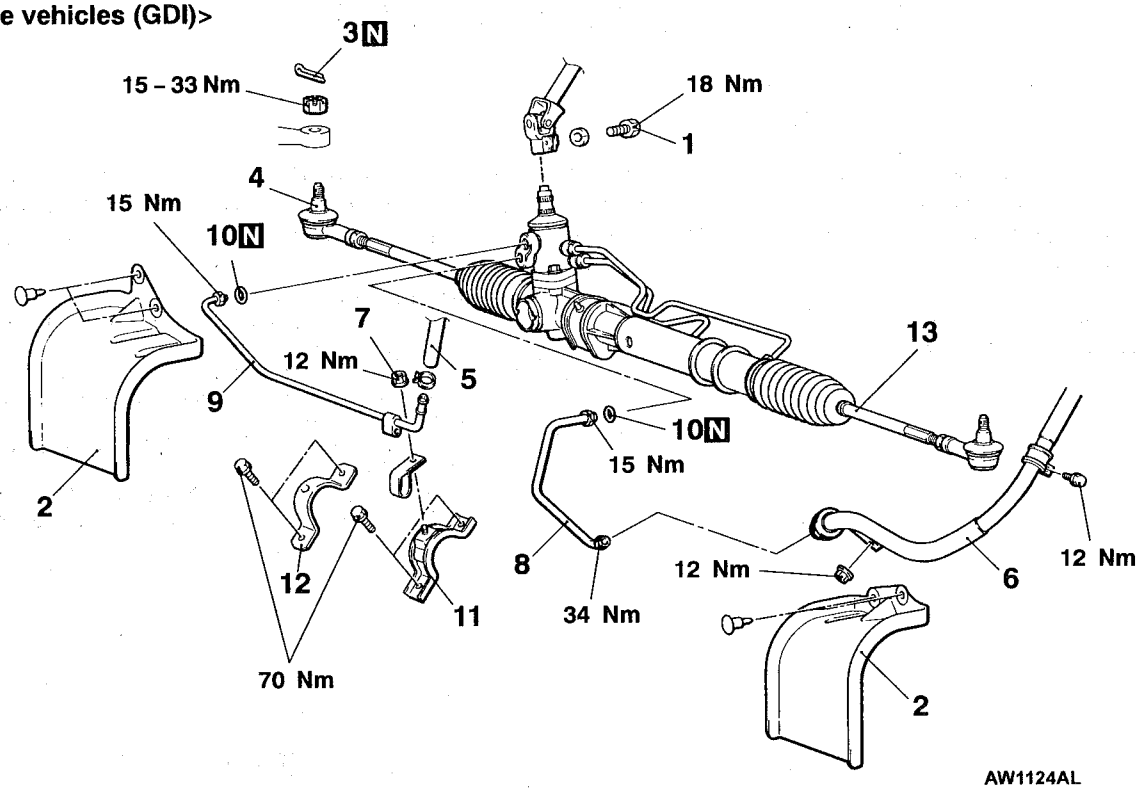

<R.H. drive vehicles (MPI)>

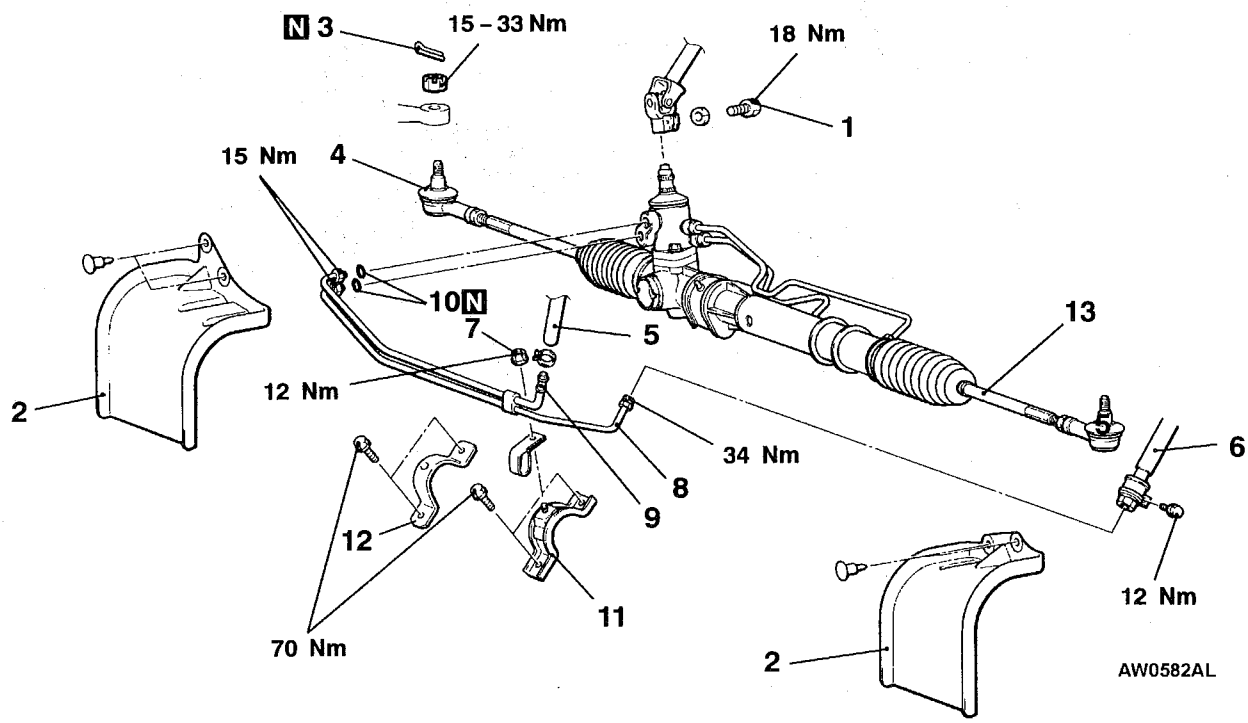

Removal steps

1. Steering gear and joint connecting bolt
2. Splash shield
3. Split pin
◀A▶ 4. Tie rod end and knuckle connection
▶B◀ 5. Return hose
▶A◀ 6. Pressure hose
7. Nut <R.H drive vehicles>
8. Pressure tube
9. Return tube
10. O-ring
11. Cylinder clamp
12. Gear housing clamp
◀B▶ 13. Steering and gear linkage

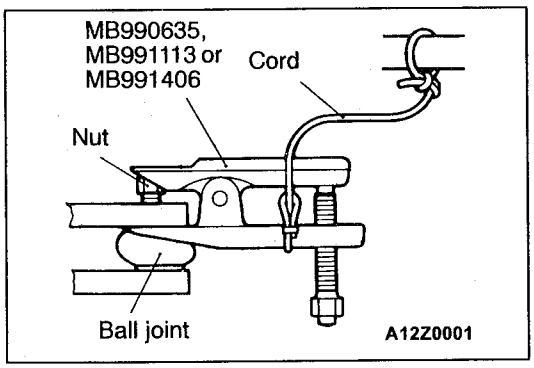

REMOVAL SERVICE POINTS

◀A▶ TIE ROD END AND KNUCKLE DISCONNECTION

Caution

(1) In order not to damage the ball joint thread, the tie rod end mounting nut must be only loosened but not removed from the ball joint. Be sure to use the special tool.

(2) Tie the special tool with a cord so as not to fall off.

◀B▶ STEERING GEAR BOX AND LINKAGE REMOVAL

Caution

Do not damage the boots when removing the steering gear box and linkage.

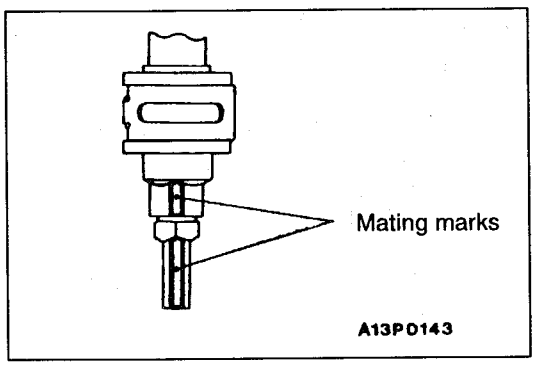

INSTALLATION SERVICE POINTS

▶A◀ PRESSURE HOSE CONNECTION

Connect the pressure hose and pressure tube with their mating marks aligned.

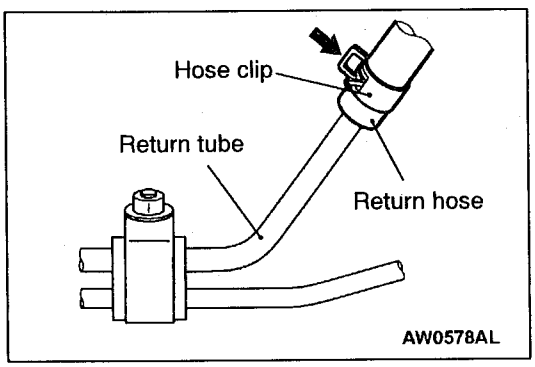

▶B◀ RETURN HOSE CONNECTION

Connect the return hose so that the claws of the hose clip are positioned as shown.

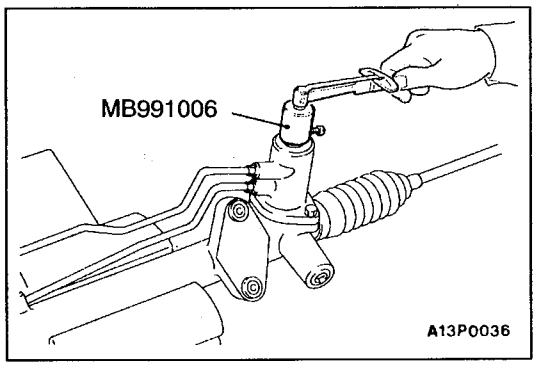

INSPECTION

GEAR BOX PINION TOTAL ROTATION TORQUE CHECK

1. Using the special tool, turn the pinion gear at a speed of one rotation per 4 to 6 seconds to measure total rotation torque.

   Standard values:
   Total rotation torque: 0.6 – 1.5 Nm
   Torque fluctuation: 0.5 Nm or less

   NOTE
   (1) Remove the bellows from the rack housing before measuring.
   (2) Measure the total rotation torque by turning the special tool left and right 180° from the neutral position.
2. If the standard values are not met, adjust the pinion total rotation torque. (Refer to P.37-26.)
3. In case the adjustment is impossible, disassemble and check the components, and repair if necessary.

   Caution
   Secure the steering gear box and linkage in their mounting positions only. Otherwise, deformation or damage could result.

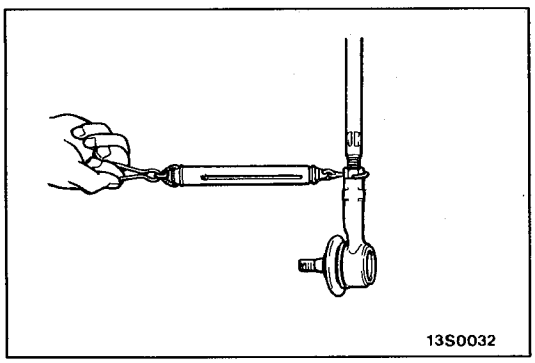

TIE ROD SWING RESISTANCE CHECK

1. Swing the tie rod 10 times hardly.
2. With the tie rod end downwards as shown, use a spring scale to measure swing resistance (swing torque).

   Standard value: 5 – 17 N (1.5 – 4.9 Nm)
3. If the measured value is above the standard value, replace the tie rod.
4. If below, check the ball joint for looseness or ratcheting. The tie rod is still serviceable when the ball joint swings smoothly.

TIE ROD END BALL JOINT DUST COVER CHECK

1. Check the dust cover for cracks or damage by pushing it with finger.
2. If the dust cover is cracked or damaged, replace the tie rod end. (Refer to P.37A-19, 20.)

   NOTE
   A cracked or damaged dust cover may damage the ball joint. Replace the dust cover when it is damaged during service work.

DISASSEMBLY AND REASSEMBLY

<L.H. drive vehicles>

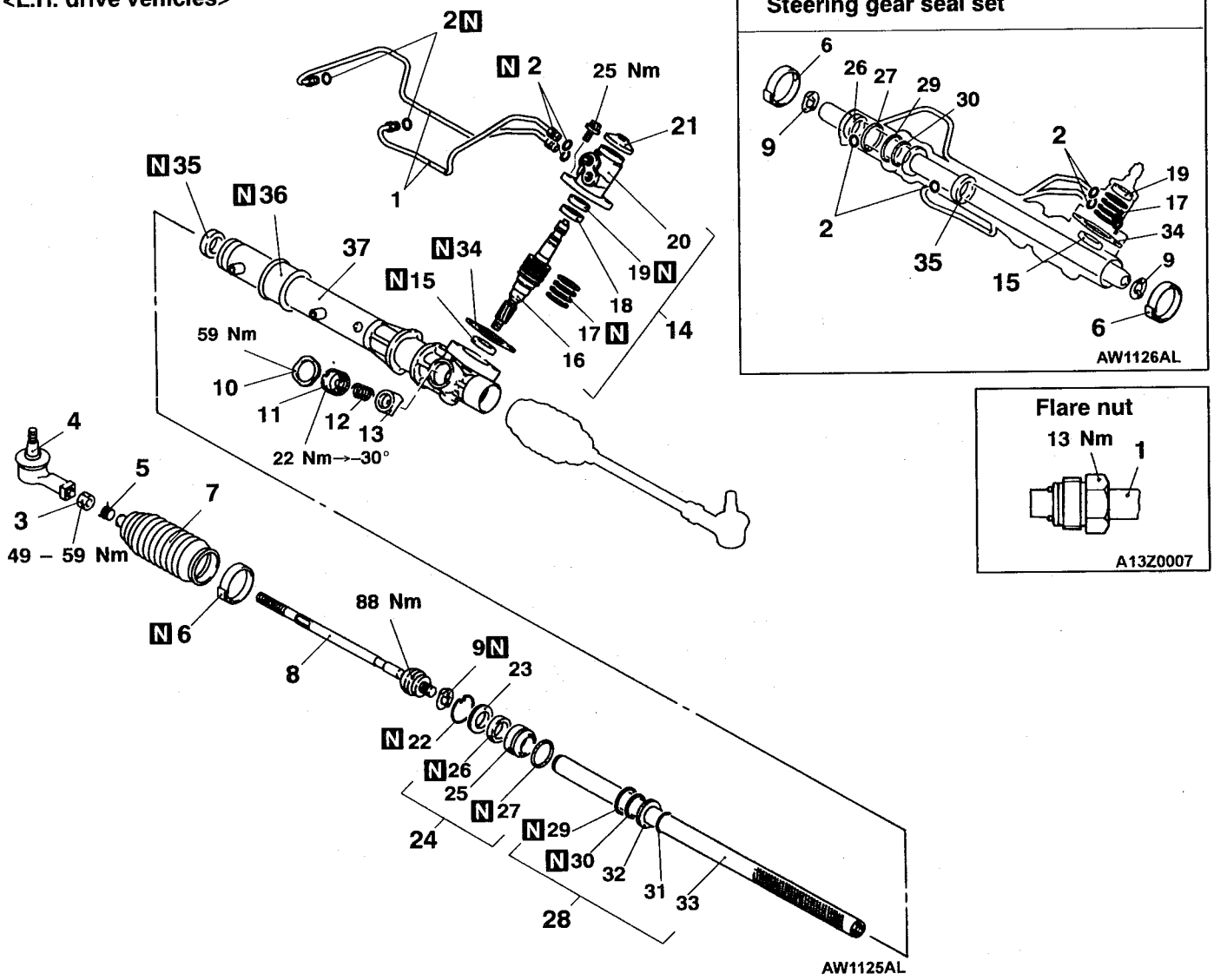

Disassembly steps

- 1. Feed pipe
- 2. O-ring
- ▶M◀ 3. Locking nut
- ▶M◀ 4. Tie rod end
- 5. Clip
- ▶L◀ 6. Band
- 7. Bellows
- ▶K◀ 8. Tie rod
- ▶K◀ 9. Tab washer
- ▶J◀ • Total pinion torque adjustment
- ▶I◀ 10. Locking nut
- ◀A▶ ▶I◀ 11. Rack support cover
- 12. Rack support spring
- 13. Rack support
- 14. Valve assembly
- ◀B▶ ▶H◀ 15. Lower oil seal
- ◀B▶ 16. Pinion and valve assembly
- ◀C▶ ▶G◀ 17. Seal ring
- ◀D▶ ▶F◀ 18. Upper bearing
- ◀D▶ ▶F◀ 19. Upper oil seal
- 20. Valve housing
- 21. Dust cover
- ◀E▶ ▶E◀ 22. Circlip
- ◀F▶ 23. Rack stopper
- ◀F▶ ▶D◀ 24. Rack bushing assembly
- ◀F▶ ▶D◀ 25. Rack bushing
- ◀F▶ ▶D◀ 26. Oil seal
- ◀F▶ 27. O-ring
- ◀F▶ ▶C◀ 28. Rack assembly
- 29. Piston ring
- 30. O-ring
- 31. Circlip
- 32. Pistion
- 33. Rack
- 34. Gasket
- ◀G▶ ▶B◀ 35. Oil seal
- ▶A◀ 36. Gear housing mounting rubber
- 37. Gear Housing

<R.H. drive vehicles>

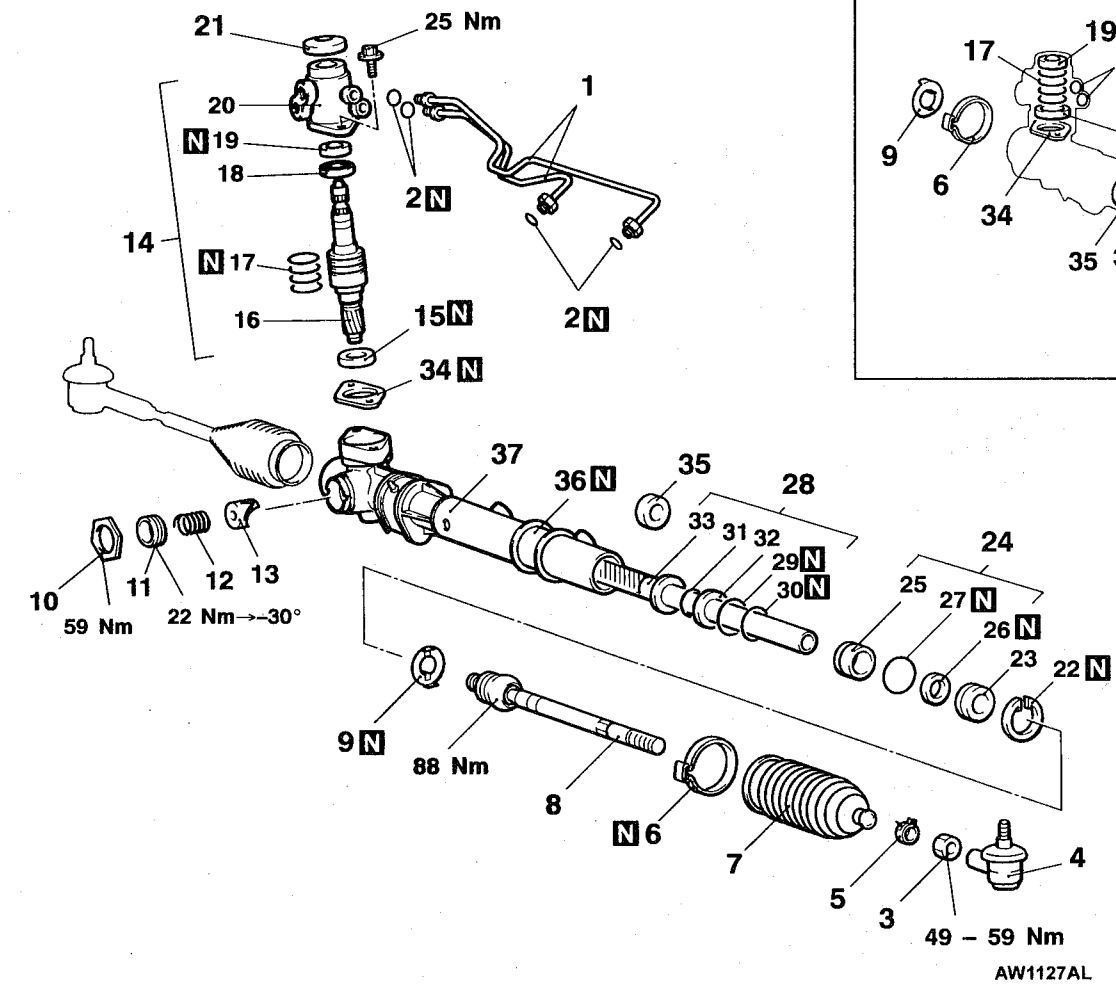

Steering gear seal set

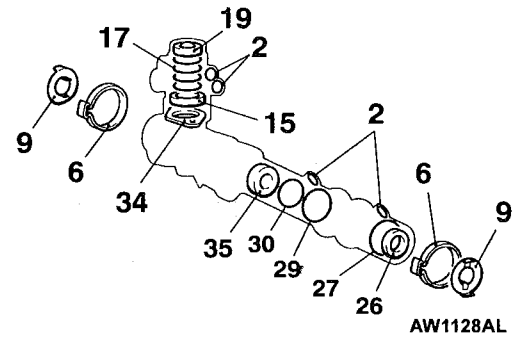

Flare nut

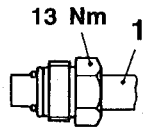

Disassembly steps

1. Feed pipe
2. O-ring
3. ▶M◀ Locking nut
4. ▶M◀ Tie rod end
5. Clip
6. ▶L◀ Band
7. Bellows
8. ▶K◀ Tie rod
9. ▶K◀ Tab washer
- ▶J◀ • Total pinion torque adjustment
10. ▶I◀ Locking nut
11. ◀A▶ ▶I◀ Rack support cover
12. Rack support spring
13. Rack support
14. Valve assembly
15. ◀B▶ ▶H◀ Lower oil seal
16. ◀B▶ Pinion and valve assembly
17. ◀C▶ ▶G◀ Seal ring
18. ◀D▶ ▶F◀ Upper bearing
19. ◀D▶ ▶F◀ Upper oil seal
20. Valve housing
21. Dust cover
22. ◀E▶ ▶E◀ Circlip
23. ◀F▶ Rack stopper
24. ◀F▶ ▶D◀ Rack bushing assembly
25. ◀F▶ ▶D◀ Rack bushing
26. ◀F▶ ▶D◀ Oil seal
27. ◀F▶ O-ring
28. ◀F▶ ▶C◀ Rack assembly
29. Piston ring
30. O-ring
31. Circlip
32. Pistion
33. Rack
34. Gasket
35. ◀G▶ ▶B◀ Oil seal
36. ▶A◀ Gear housing mounting rubber
37. Gear Housing

Lubrication and Sealing Points

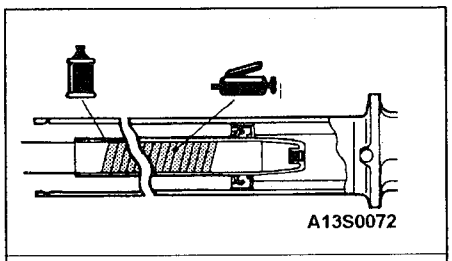

Grease: Repair kit grease

Fluid:
Automatic transmission fluid
DEXRON or DEXRON II

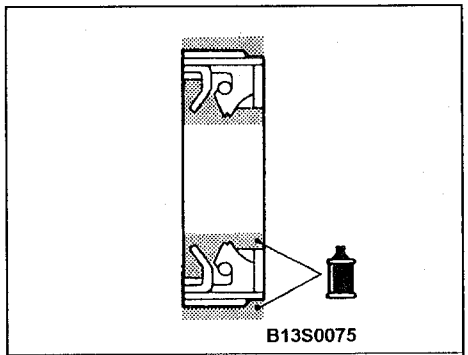

Fluid:
Automatic transmission fluid
DEXRON or DEXRON II

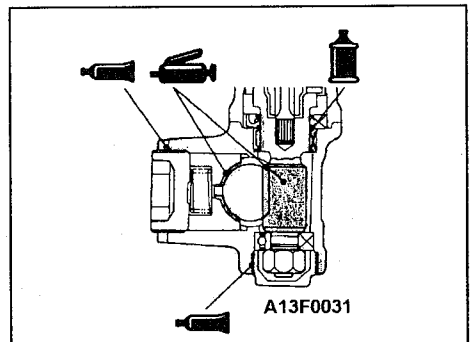

Grease: Repair kit grease

Sealant: 3M ATD Part No. 8661
or equivalent

Fluid:
Automatic transmission fluid
DEXRON or DEXRON II

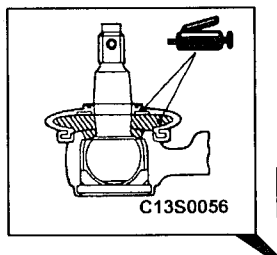

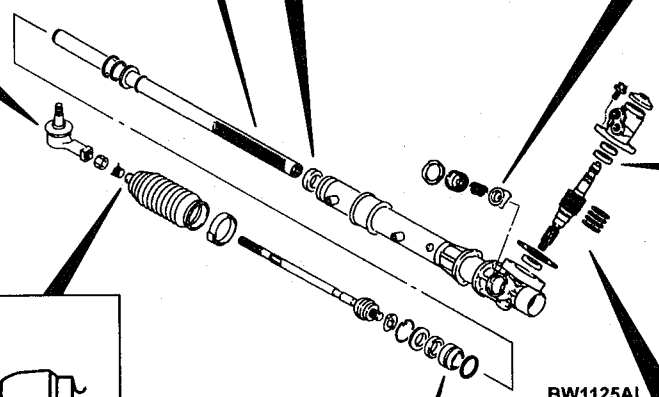

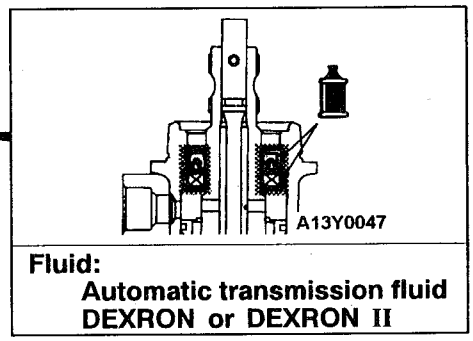

Fluid:
Automatic transmission fluid
DEXRON or DEXRON II

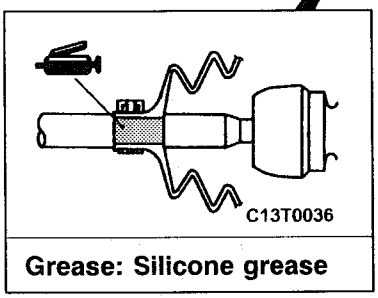

Grease: Silicone grease

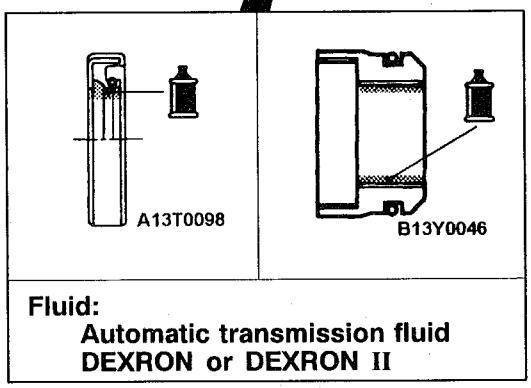

Fluid:
Automatic transmission fluid
DEXRON or DEXRON II

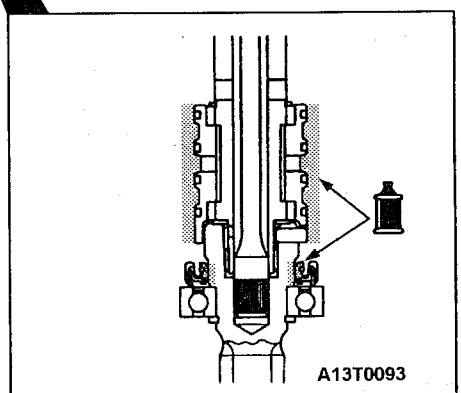

Fluid:
Automatic transmission fluid
DEXRON or DEXRON II

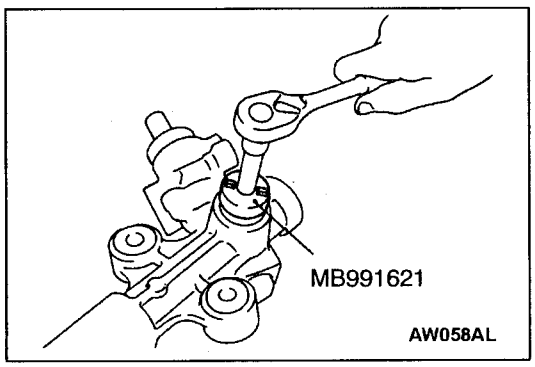

DISASSEMBLY SERVICE POINTS

◀A▶ RACK SUPPORT COVER REMOVAL

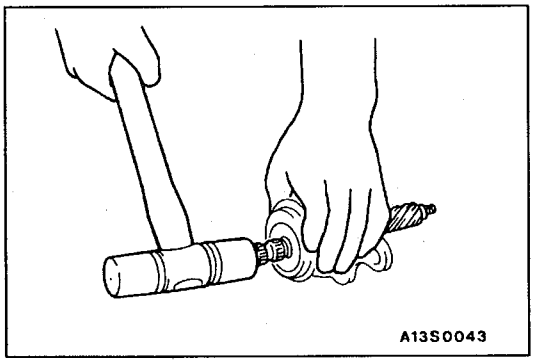

◀B▶ OIL SEAL/PINION AND VALVE ASSEMBLY REMOVAL

With a plastic hammer, lightly tap the pinion and valve assembly in its spline to remove the lower oil seal and pinion and valve assembly from the valve housing.

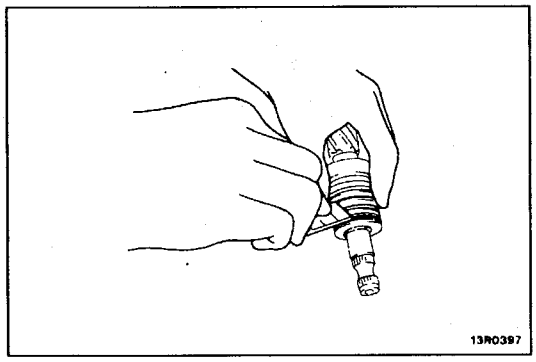

◀C▶ SEAL RING REMOVAL

Cut the seal ring to remove from the pinion and valve assembly.

Caution
When cutting the seal ring, be careful not to damage the pinion and valve assembly.

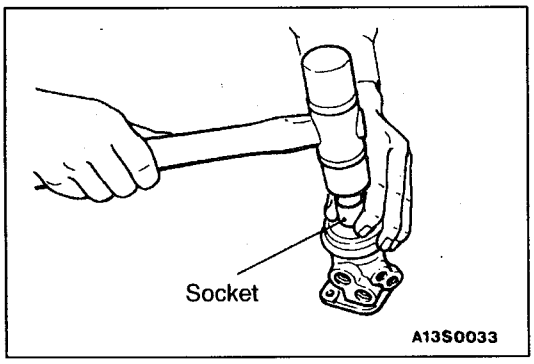

◀D▶ UPPER BEARING/UPPER OIL SEAL REMOVAL

Using a socket, pull out the upper oil seal and bearing from the valve housing.

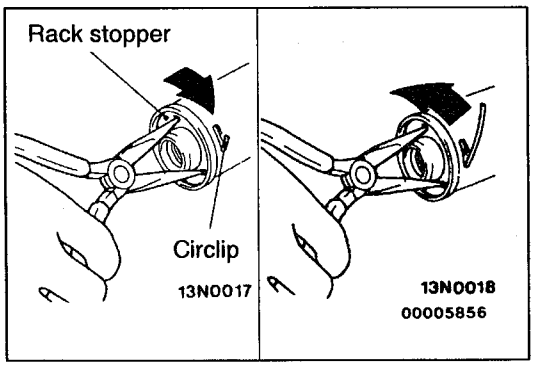

◀E▶ CIRCLIP REMOVAL

1. Turn the rack stopper clockwise until the circlip end comes out of the slot in the rack housing.
2. Turn the rack stopper anticlockwise to remove the circlip.

Caution
Do not turn the rack stopper anticlockwise first. Otherwise, the circlip will get caught in the slot in the housing, which makes the rack stopper unable to turn.

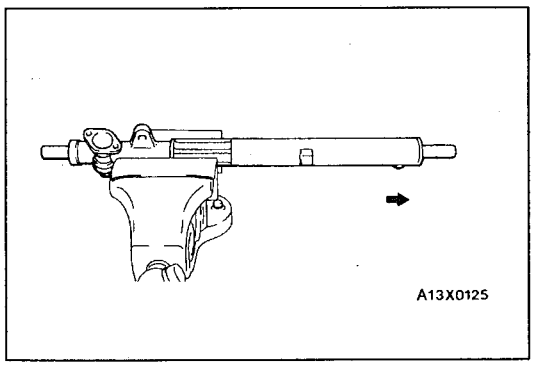

◀F▶ RACK STOPPER/RACK BUSHING ASSEMBLY/ RACK BUSHING/OIL SEAL/O-RING/RACK REMOVAL

1. Remove the rack stopper, rack bushing, oil seal and O-ring together by pulling out the rack gently.

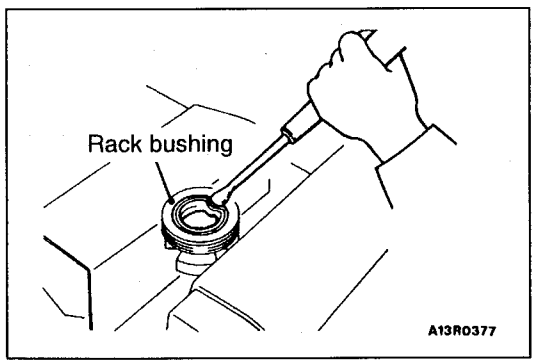

2. Partially bend the oil seal to remove from the rack bushing.

Caution
Use care not to damage the oil seal press-fitting surface of the rack bushing.

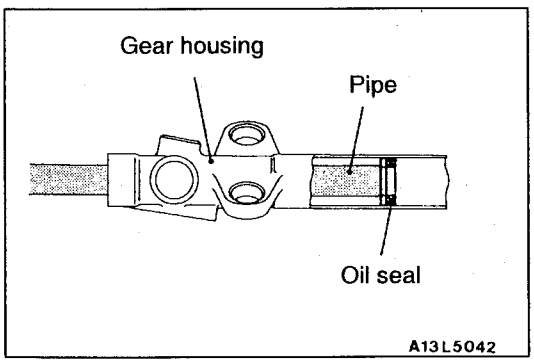

◀G▶ OIL SEAL REMOVAL

Use a pipe or the like to pull out the oil seal.

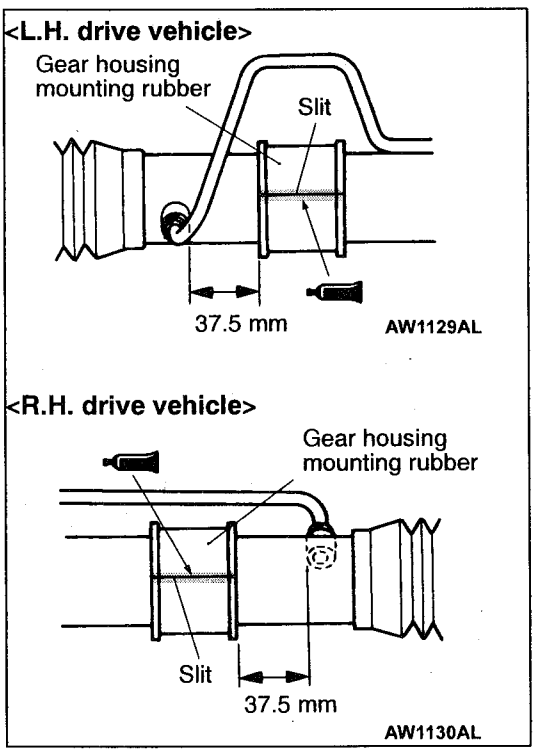

REASSEMBLY SERVICE POINTS

▶A◀ GEAR HOUSING MOUNTING RUBBER INSTALLATION

1. Install the gear housing mounting rubber on the rack housing so that the dimension shown is achieved.

   NOTE
   The gear housing mounting rubber can be installed regardless of the installation direction of the slit.

2. Apply specified adhesive to the slit of the gear housing mounting rubber.

   Specified adhesive:
   3M ATD Part No.8155 or equivalent

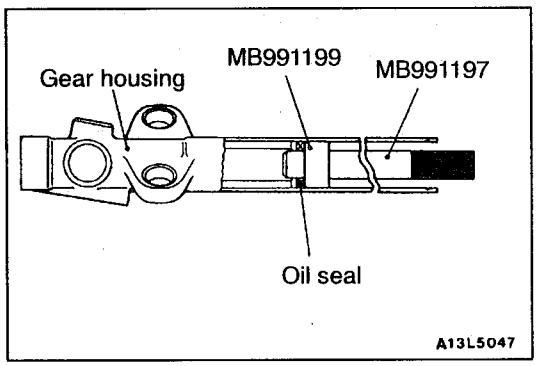

▶B◀ OIL SEAL INSTALLATION

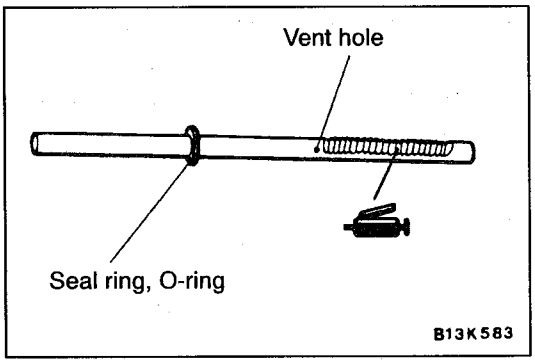

▶C◀ RACK ASSEMBLY INSTALLATION

1. Apply repair kit grease to the teeth of the rack assembly.

Caution
Use care not to close the vent hole in the rack with grease.

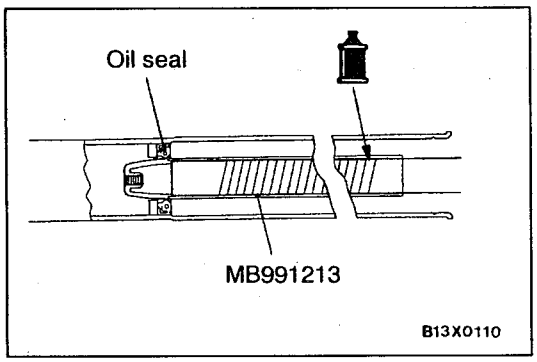

2. Cover the serrations of the rack assembly with the special tool.
3. Apply specified fluid to the outer surfaces of the special tool, seal ring and O-ring.

Specified fluid:
Automatic transmission fluid
DEXRON or DEXRON II

4. Slowly insert the rack covered with the special tool from the power cylinder side of the gear housing.

Caution
Carefully push in the rack with the oil seal centre and the special tool end matched. This is to avoid the retainer spring coming off.

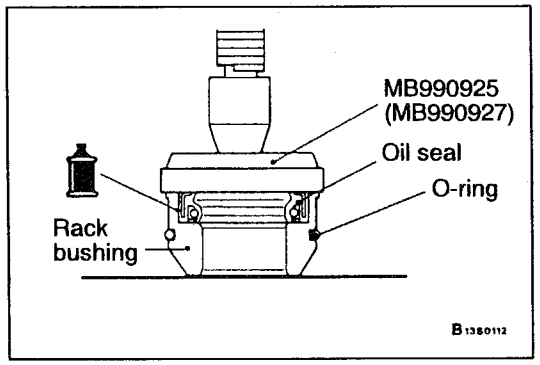

▶D◀ OIL SEAL/RACK BUSHING/RACK BUSHING ASSEMBLY INSTALLATION

1. Apply specified fluid to the outer surface of the oil seal. Using the special tool, press in the oil seal until it is flush with the bushing end face.

Specified fluid:
Automatic transmission fluid
DEXRON or DEXRON II

Caution
Do not use Dia Queen ATF SPII and ATF SPII M as they damage the components of the power steering.

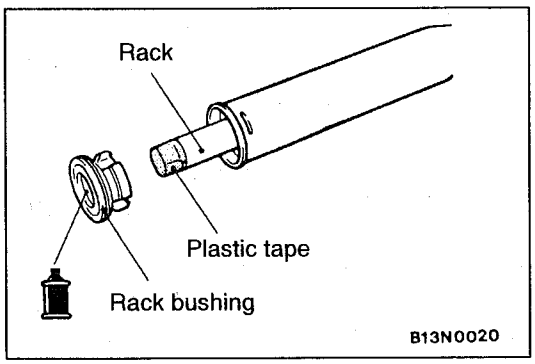

2. Apply the specified fluid to the oil seal inner surface and the O-ring.

   Specified fluid:
   Automatic transmission fluid
   DEXRON or DEXRON II

   Caution
   Do not use Dia Queen ATF SPII and ATF SPII M as they damage the components of the power steering.

3. Wrap the rack end with plastic tape, and push the rack bushing onto the rack.

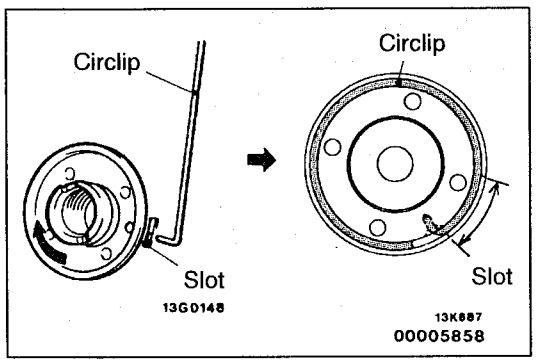

▶E◀ CIRCLIP INSTALLATION

Align the mark on the rack stopper and the slot in the cylinder. Then, insert the circlip into the rack stopper hole through the cylinder hole. Turn the rack stopper clockwise and insert the circlip firmly.

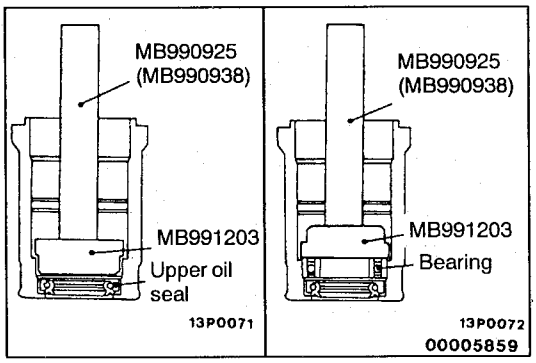

▶F◀ UPPER OIL SEAL/UPPER BEARING INSTALLATION

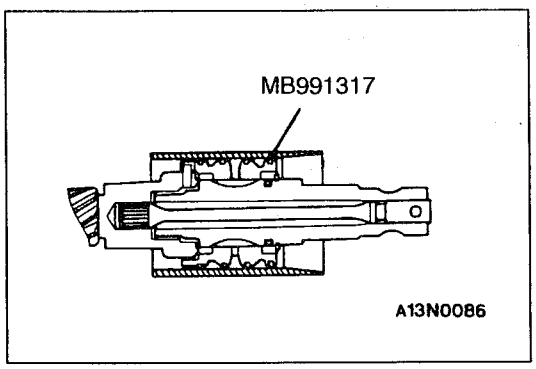

▶G◀SEAL RING INSTALLATION

After installation, using the special tool or by hand, compress seal rings that expand during installation.

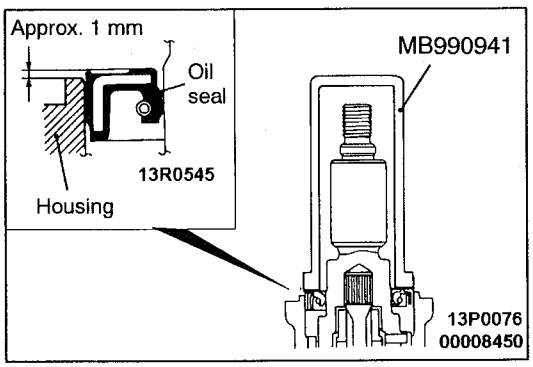

▶H◀ LOWER OIL SEAL INSTALLATION

Using the special tool, press the oil seal into the valve housing. The upper surface of the oil seal must project outwards about 1 mm from the housing end surface.

Caution
When the oil seal is flush with or lower than the housing edge, reassemble the components. Otherwise, oil leaks will result.

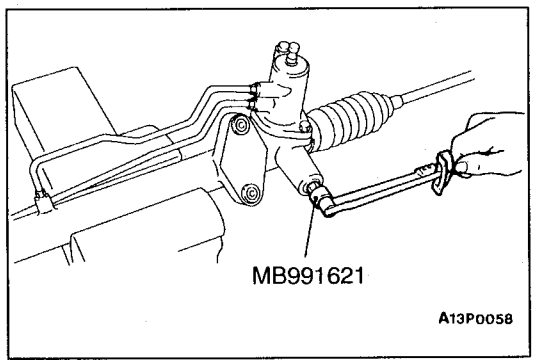

▶I◀ RACK SUPPORT COVER/LOCKING NUT INSTALLATION

1. Apply specified sealant to the rack cover support thread.
   Specified fluid:
   3M ATD Part No.8661 or equivalent
2. Using the special tool, tighten the rack support cover to 22 Nm.
3. Return the rack support cover by about 30°.
4. Tighten the locking nut to the specified torque, using the special tool to prevent the rack support cover from spinning.

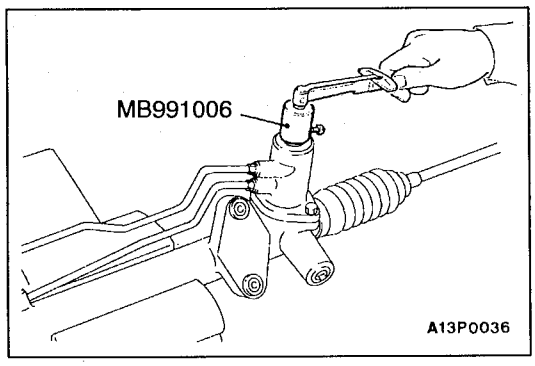

▶J◀ PINION TOTAL ROTATION TORQUE ADJUSTMENT

1. Using the special tool, measure total rotation torque by turning the pinion gear at a speed of one rotation per 4 to 6 seconds.
   Standard value:
   Total rotation torque: 0.6 – 1.5 Nm
   Torque fluctuation: 0.5 Nm or less
2. If the total rotation torque or torque fluctuation does not meet the standard values, adjust by returning the rack support cover within a range of 0 to 30°.
   Caution
   (1) Adjust around the maximum limit of the standard values.
   (2) See that no ratcheting or catching are present when operating the rack towards the shaft direction.
   (3) Measure the total pinion torque through the whole stroke of the rack.
3. If the adjustment is impossible in the given range, check the components of the rack support cover, and replace if necessary.

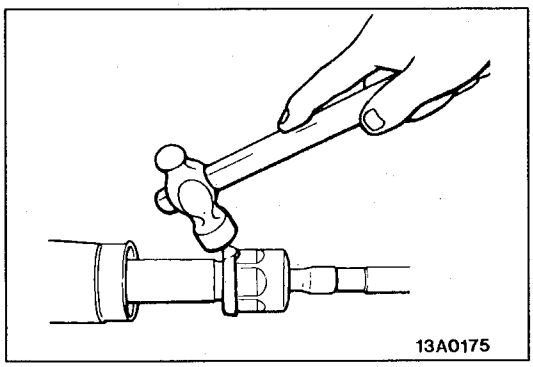

▶K◀ TAB WASHER/TIE ROD INSTALLATION

After installing the tie rod to the rack, fold the tab washer end (2 locations) to the tie rod notch.

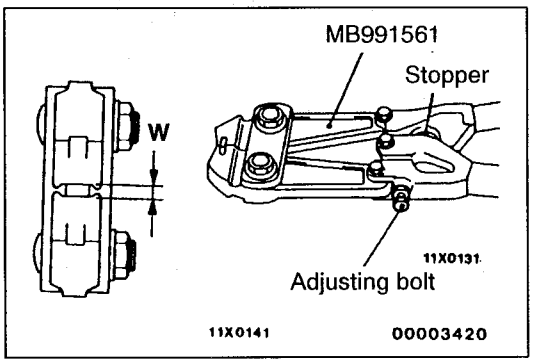

▶L◀ BELLOWS BAND INSTALLATION

1. Turn the adjusting bolt of the special tool to adjust the opening dimension (W) to the standard value.

   Standard value (W): 2.9 mm
   <When more than 2.9 mm>
   Screw in the adjusting bolt.
   <When less than 2.9 mm>
   Loosen the adjusting bolt.

   NOTE
   (1) The dimension (W) is adjusted by about 0.7 mm per one turn.
   (2) Do not turn the adjusting bolt more than one turn.

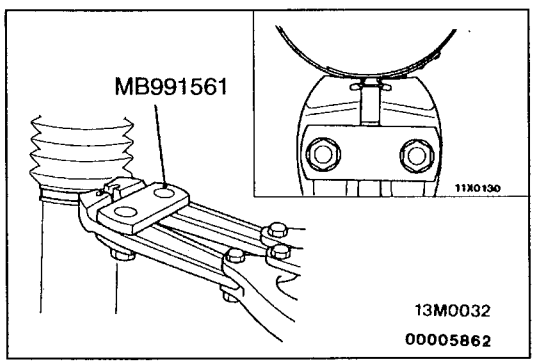

2. Use the special tool to crimp the bellows band.

   Caution
   (1) Hold the rack housing, and use the special tool to crimp the bellows band securely.
   (2) Crimp the bellows band until the special tool touches the stopper.

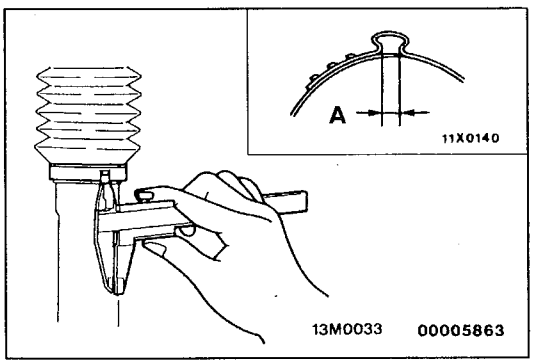

3. See that the crimped width (A) meets the standard value.

   Standard value (A): 2.4 – 2.8 mm
   <When more than 2.8 mm>
   Readjust the dimension (W) of step (1) to the value calculated by the following equation, and repeat step (2).

   W = 5.5 mm – A [Example: If (A) is 2.9 mm, (W) is 2.6 mm.]

   <When less than 2.4 mm>
   Remove the bellows band, readjust the dimension (W) of step (1) to the value calculated by the following equation, and use a new bellows band to repeat steps (2) to (3).

   W = 5.5 mm – A [Example: If (A) is 2.3 mm, (W) is 3.2 mm.]

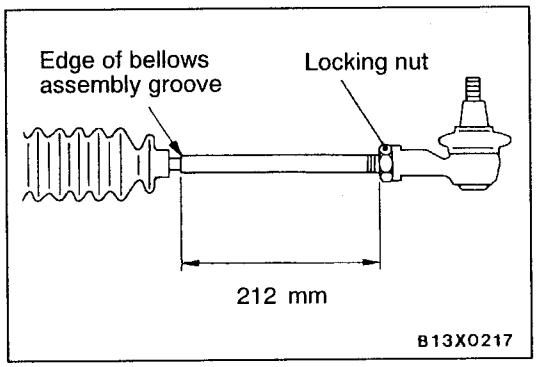

▶M◀TIE ROD END/LOCKING NUT INSTALLATION

Screw in the tie rod end until the dimension shown is achieved. Then, temporarily tighten with the locking nut.

NOTE
The locking nut must be tightened securely only after the power steering gear box and linkage are installed to the vehicle and toe-in is adjusted.

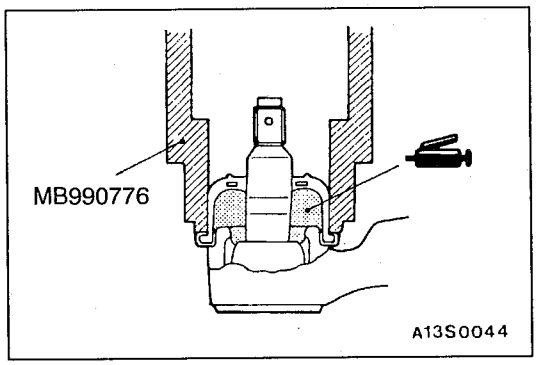

TIE ROD END BALL JOINT DUST COVER REPLACEMENT

Only when the dust cover is damaged accidentally during service work, replace the dust cover as follows:

1. Apply grease inside a new dust cover.
2. Using the special tool, press in the dust cover to the tie rod end.
3. Check the dust cover for cracks or damage by pushing it with finger.

POWER STEERING OIL PUMP

REMOVAL AND INSTALLATION

<4G1-MPI>

Pre-removal Operation
Power Steering Fluid Draining (Refer to P.37A-9.)

Post-installation Operation
- Power Steering Fluid Supplying and Bleeding (Refer to P.37A-9.)
- Drive Belt Tension Adjusting (Refer to GROUP 11B.)

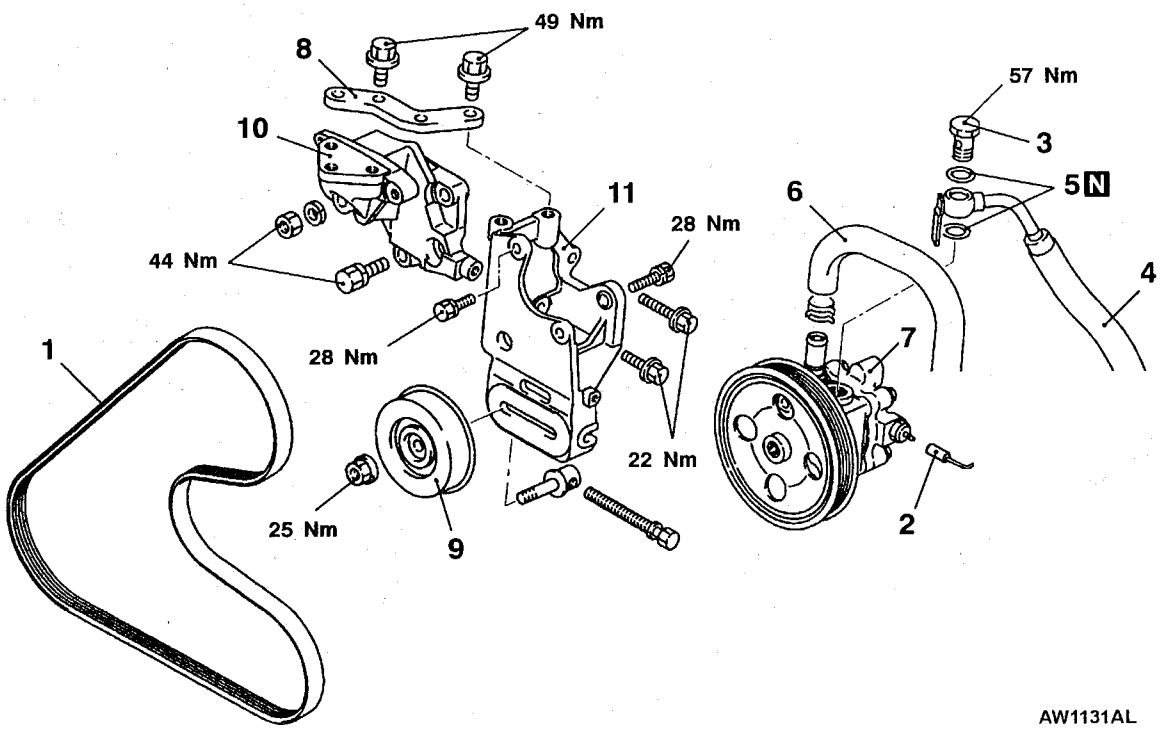

Removal steps
- Air intake duct
1. Drive belt
2. Pressure switch connector
3. Eye bolt
4. Pressure hose
5. Gasket

▶A◀ 6. Suction hose
7. Oil pump assembly
8. Oil pump stay
9. Tensioner pulley
10. Engine support bracket
11. Oil pump bracket

<4G9>

Pre-removal Operation
Power Steering Fluid Draining (Refer to P.37A-9.)

Post-installation Operation
- Power Steering Fluid Supplying and Bleeding (Refer to P.37A-9.)
- Drive Belt Tension Adjusting (Refer to GROUP 11A/11C.)

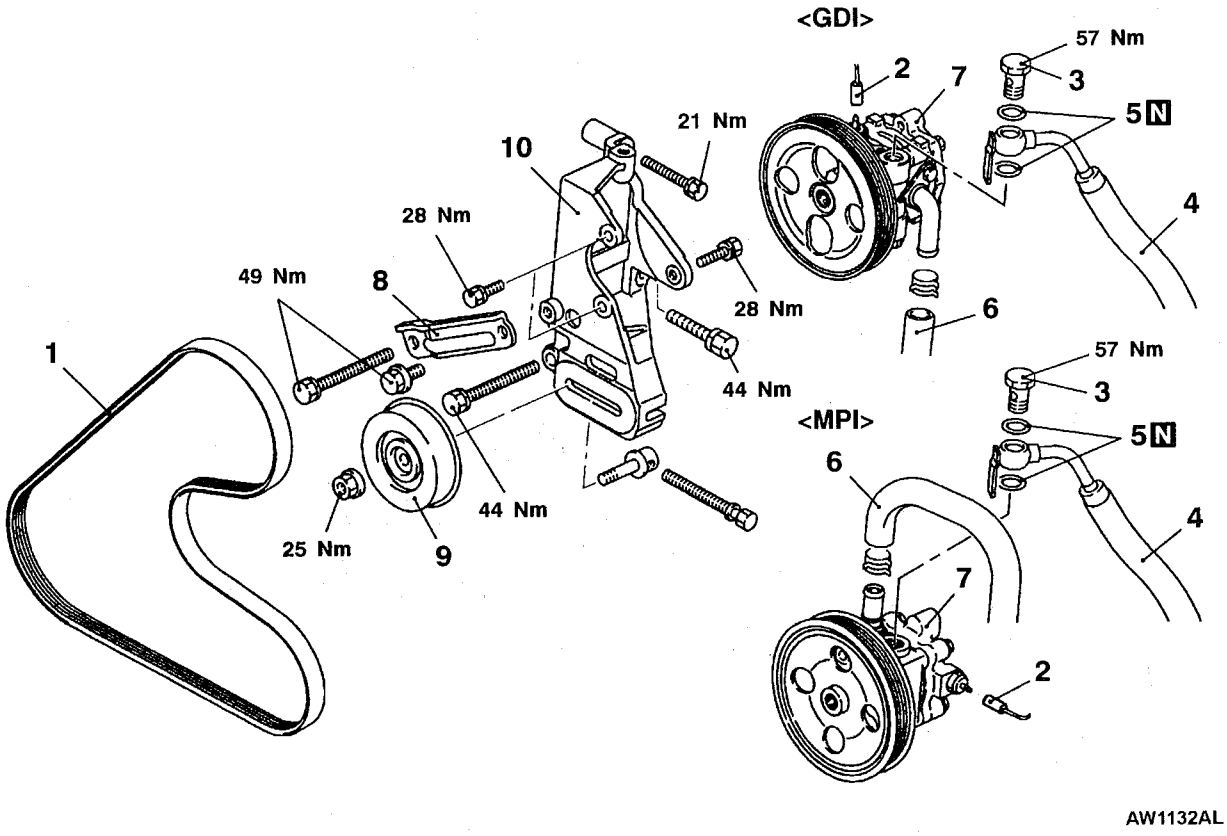

Removal steps
- Air intake duct
1. Drive belt
2. Pressure switch connector
3. Eye bolt
4. Pressure hose
5. Gasket

▶A◀ 6. Suction hose
7. Oil pump assembly
8. Oil pump stay
9. Tensioner pulley
10. Oil pump bracket

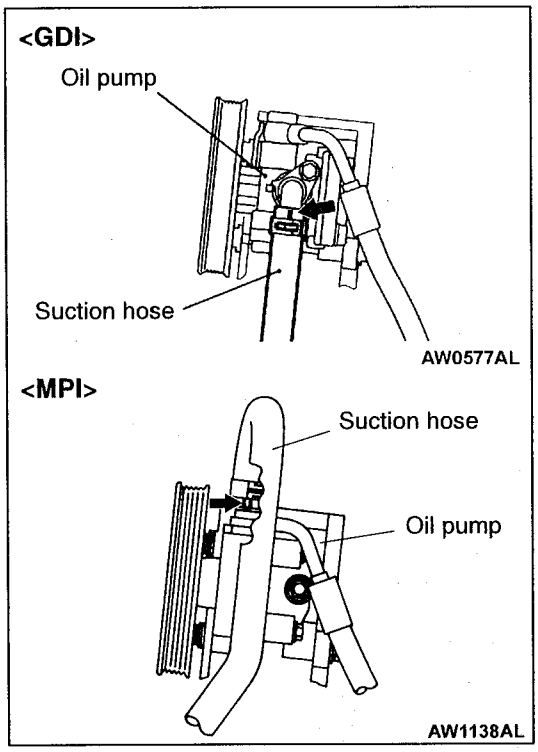

INSTALLATION SERVICE POINT

▶A◀ SUCTION HOSE INSTALLATION

Install so that the mark on the suction hose is positioned as shown.

DISASSEMBLY AND REASSEMBLY

<GDI>

Caution
Never disassemble the terminal assembly unable to be reassembled.

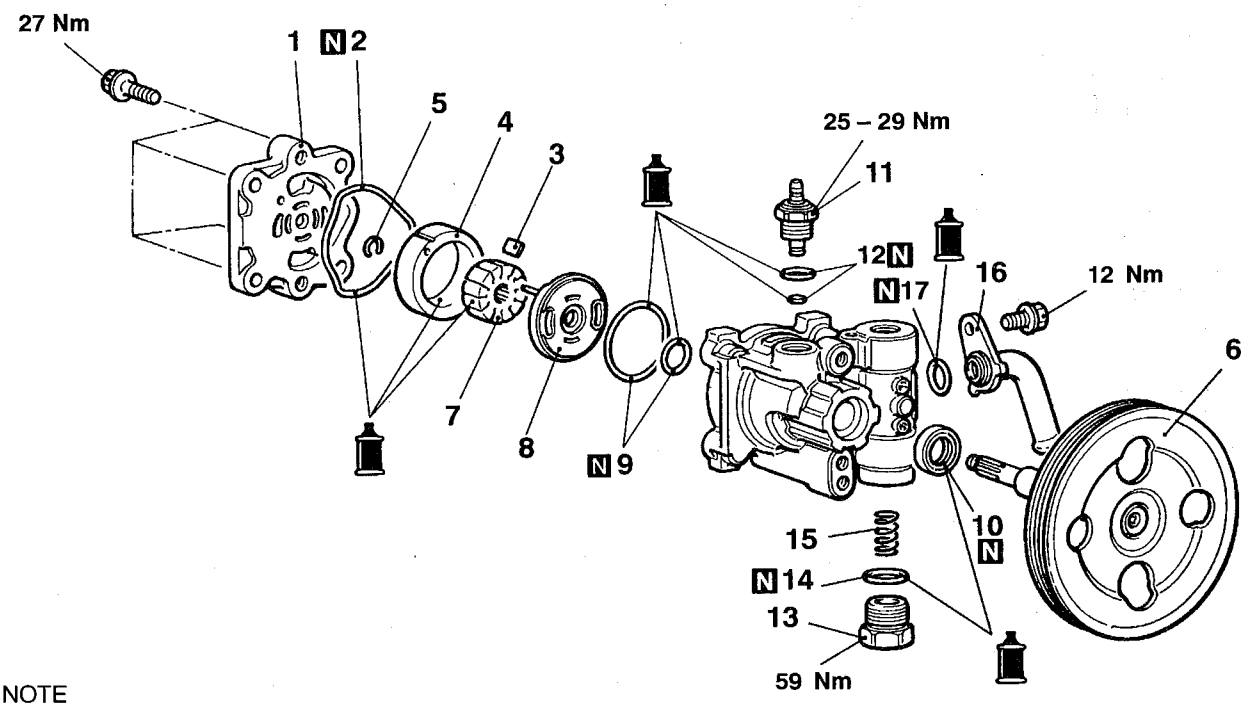

NOTE

W0574AL
00008929

: Automatic transmission fluid DEXRON or DEXRON II

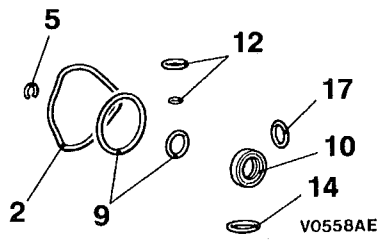

Oil pump seal kit

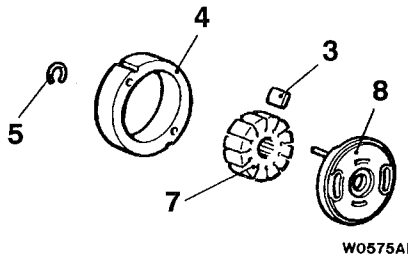

Oil pump cartridge kit

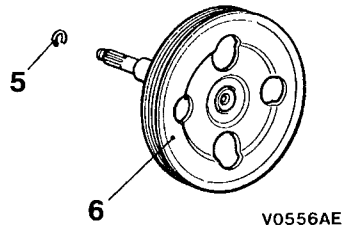

Oil pump pulley and shaft kit

Disassembly steps

1. Pump cover
2. O-ring
▶E◀ 3. Vanes
▶D◀ 4. Cam ring
5. Snap ring
6. Pulley and shaft
▶C◀ 7. Rotor
8. Side plate
▶A◀ 9. O-ring
▶B◀ 10. Oil seal
11. Terminal assembly
▶A◀ 12. O-ring
13. Inner plug
▶A◀ 14. O-ring
15. Flow control spring
16. Suction connector
▶A◀ 17. O-ring

<MPI>

Caution
Never disassemble the terminal assembly and the valve sub-assembly unable to be reassembled.

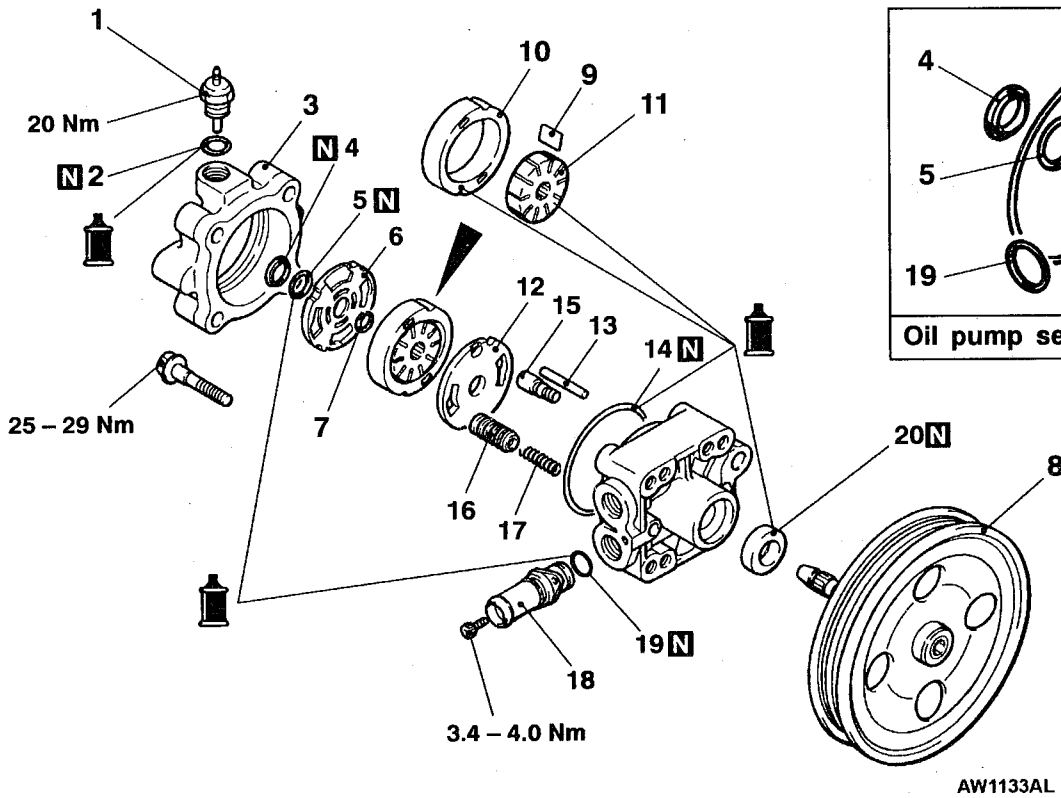

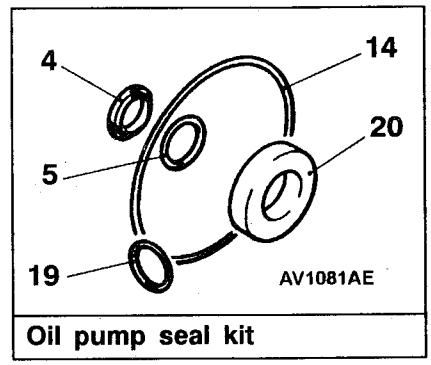

Oil pump seal kit

NOTE

: Automatic transmission fluid DEXRON or DEXRON II

Disassembly steps

1. Terminal assembly
2. O-ring
3. Rear cover
4. Back-up ring
▶A◀ 5. O-ring
6. Side plate (Rear)
7. Snap ring
8. Pulley and shaft
▶E◀ 9. Vane
▶D◀ 10. Cum ring
▶C◀ 11. Rotor
12. Side plate (Front)
13. Locking pin
14. O-ring
15. Valve sub-assembly
16. Spool
17. Spring
18. Suction connector
▶A◀ 19. O-ring
▶B◀ 20. Oil seal

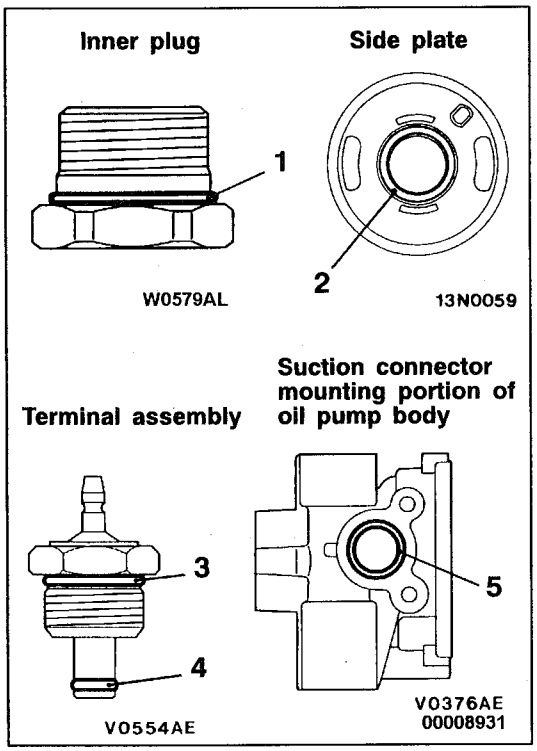

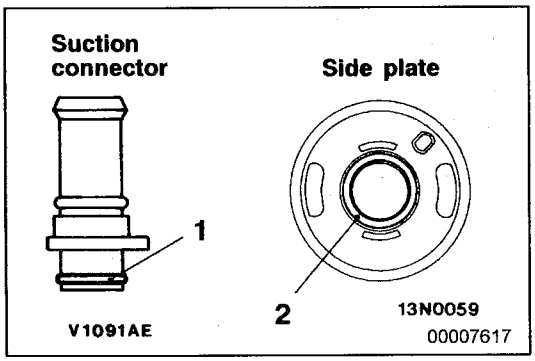

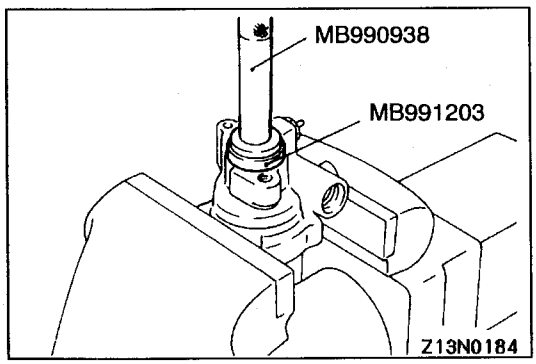

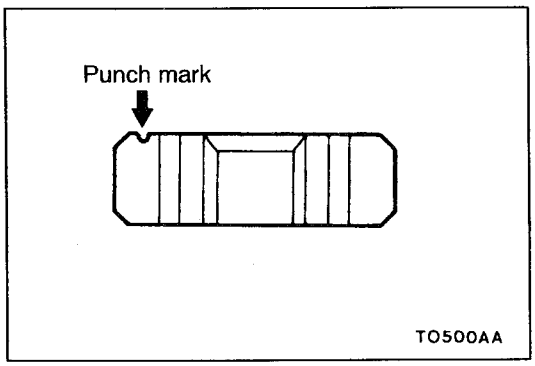

REASSEMBLY SERVICE POINTS

▶A◀ O-RING INSTALLATION

<GDI>

No.	ID × Width mm
1	21.0 × 1.9
2	14.8 × 2.4
3	14.8 × 1.9
4	3.8 × 1.9
5	15.8 × 2.4

<MPI>

No.	ID × Width mm
1	13.3 × 1.6
2	15.0 × 2.0

▶B◀ OIL SEAL INSTALLATION

▶C◀ ROTOR INSTALLATION

Install the rotor with its punch mark towards the side plate.

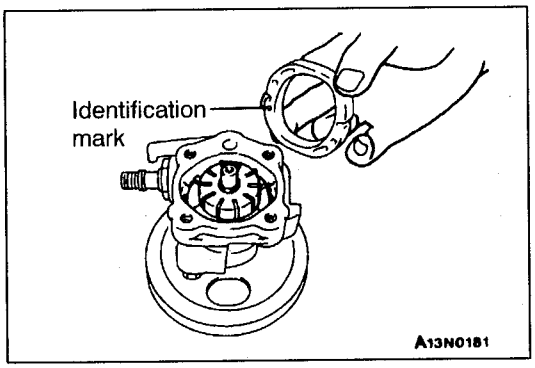

▶D◀ CAM RING INSTALLATION

Install the cam ring with its identification mark towards the side plate.

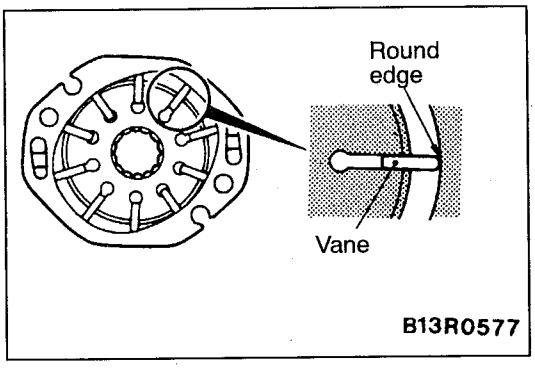

▶E◀ VANE INSTALLATION

Install the vane to the rotor with its round edge outwards (towards cam ring).

POWER STEERING OIL HOSES

REMOVAL AND INSTALLATION

Pre-removal and Post-installation Operations
- Power Steering Fluid Draining and Supplying, and Bleeding (Refer to P.37A-9.)
- Under Cover Removal and Installation
- Air Intake Hose, Resonator, Air Duct, Air Cleaner Cover Removal and Installation (Refer to GROUP 15.)

<L.H. drive vehicles (MPI)>

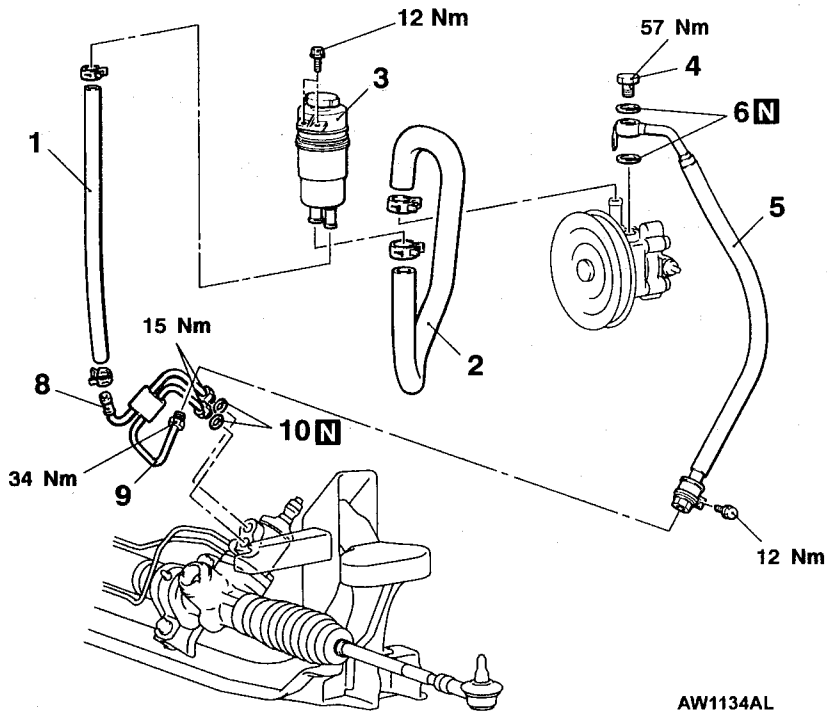

<R.H. drive vehicles (GDI)>

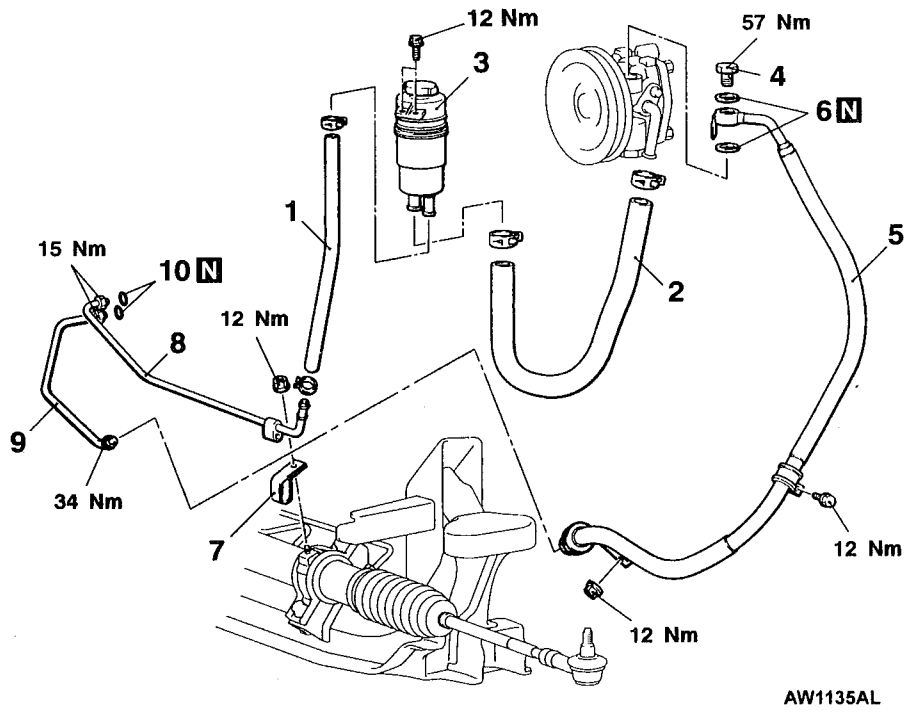

<R.H. drive vehicles (MPI)>

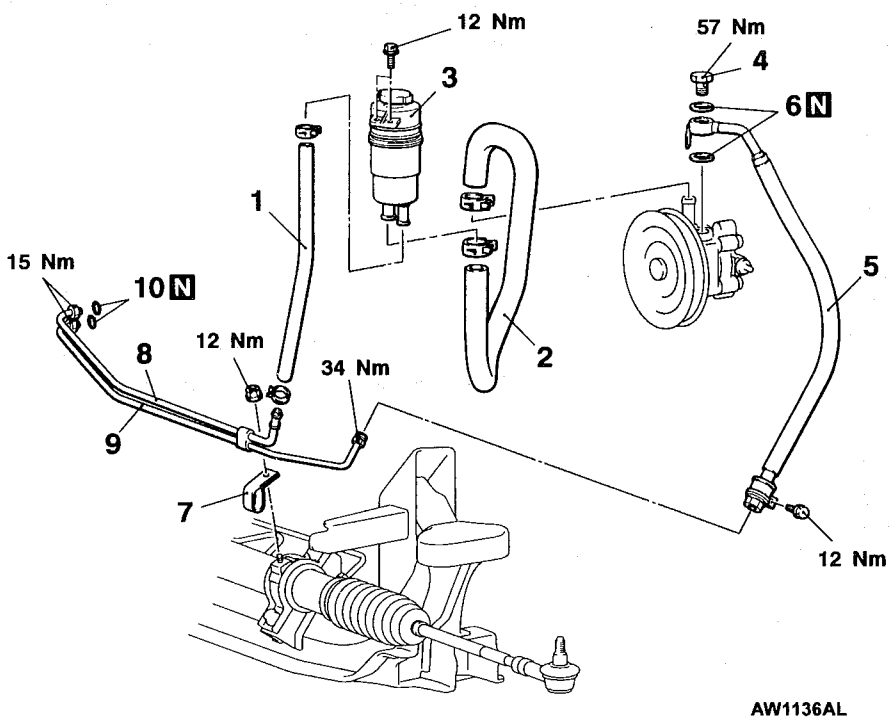

Removal steps

▶C◀ 1. Return hose
▶B◀ 2. Suction hose
3. Oil reservoir
• Splash shield (Refer to P.37A-16, 17.)
4. Eye bolt
▶A◀ 5. Pressure hose
6. Gasket
7. Clip
8. Return tube
9. Pressure tube
10. O-ring

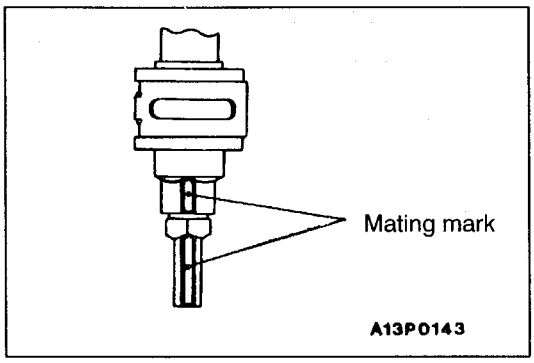

INSTALLATION SERVICE POINTS

▶A◀ PRESSURE HOSE INSTALLATION

Install with the marks on the pressure hose and pressure tube aligned.

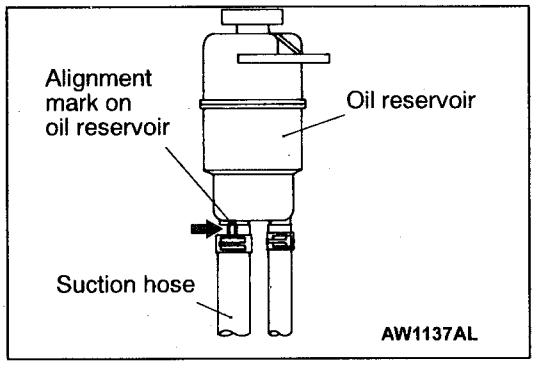

▶B◀ SUCTION HOSE INSTALLATION

1. Install with the mark at the end of the hose (oil reservoir side) and the alignment mark on the oil reservoir aligned.

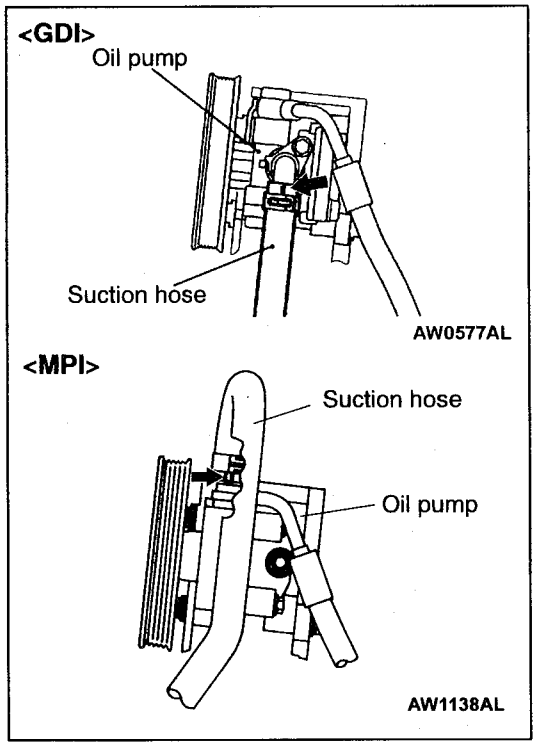

2. Install so that the mark at the end of the hose(oil pump side) is positioned as shown.

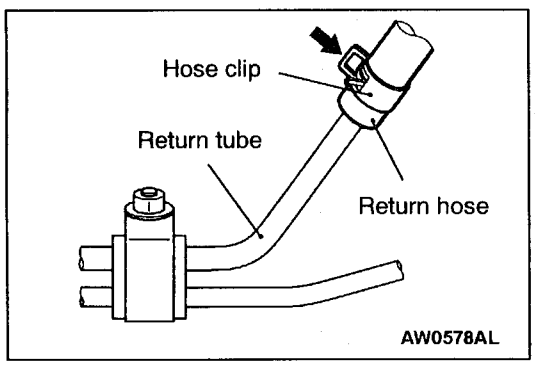

▶C◀ RETURN HOSE INSTALLATION

Install so that the hose clip claws are placed as shown.